RFA Loopback Setup for MR750 (3.0T) – **headdummy**
(Agilent RF power measurement kits)
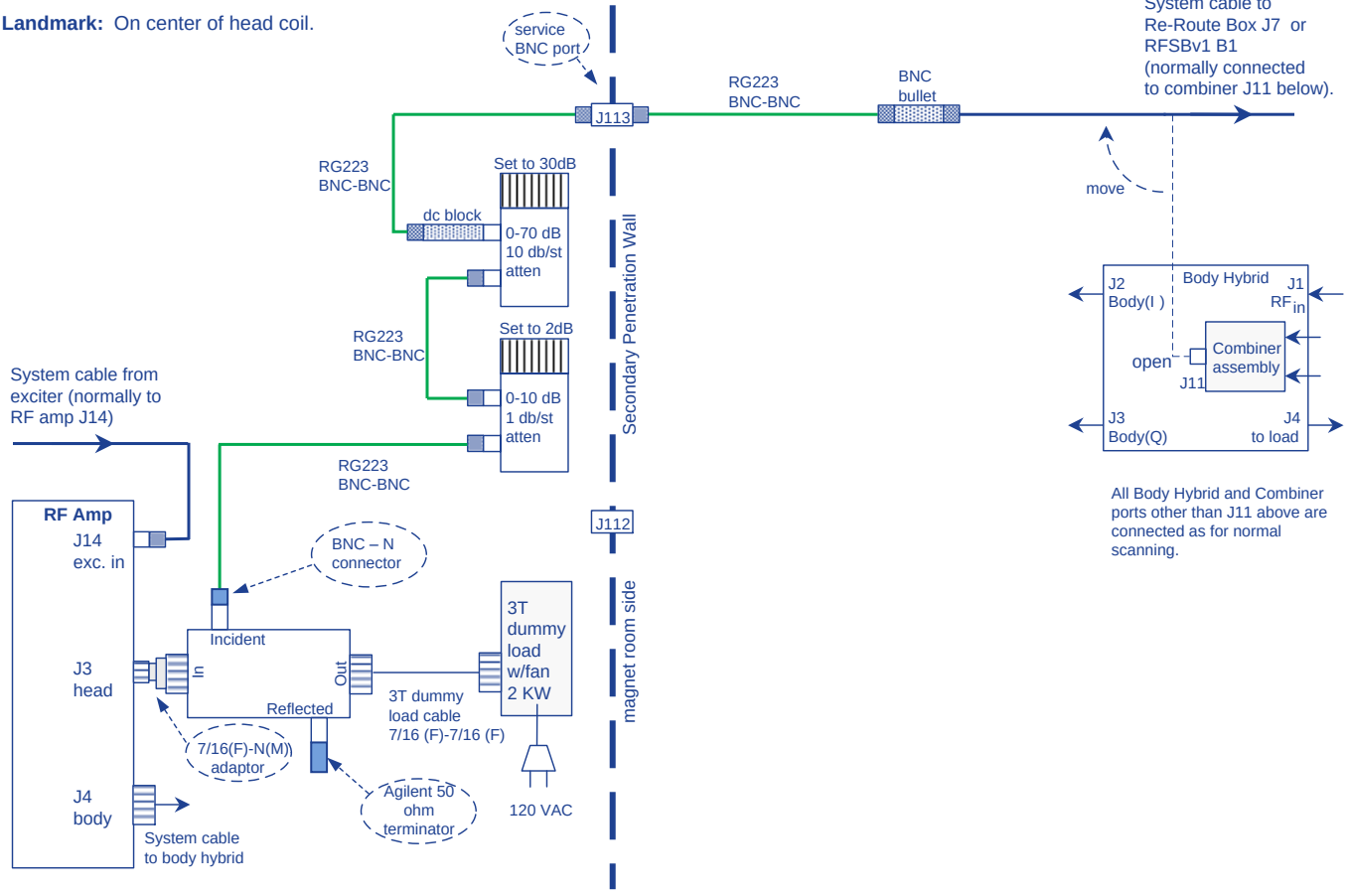
Landmark: On center of head coil.