**MAGNET ENCLOSURE KIT (PHOSPHORUS) 46–301548G1 FOR MG 2 AND MG3**

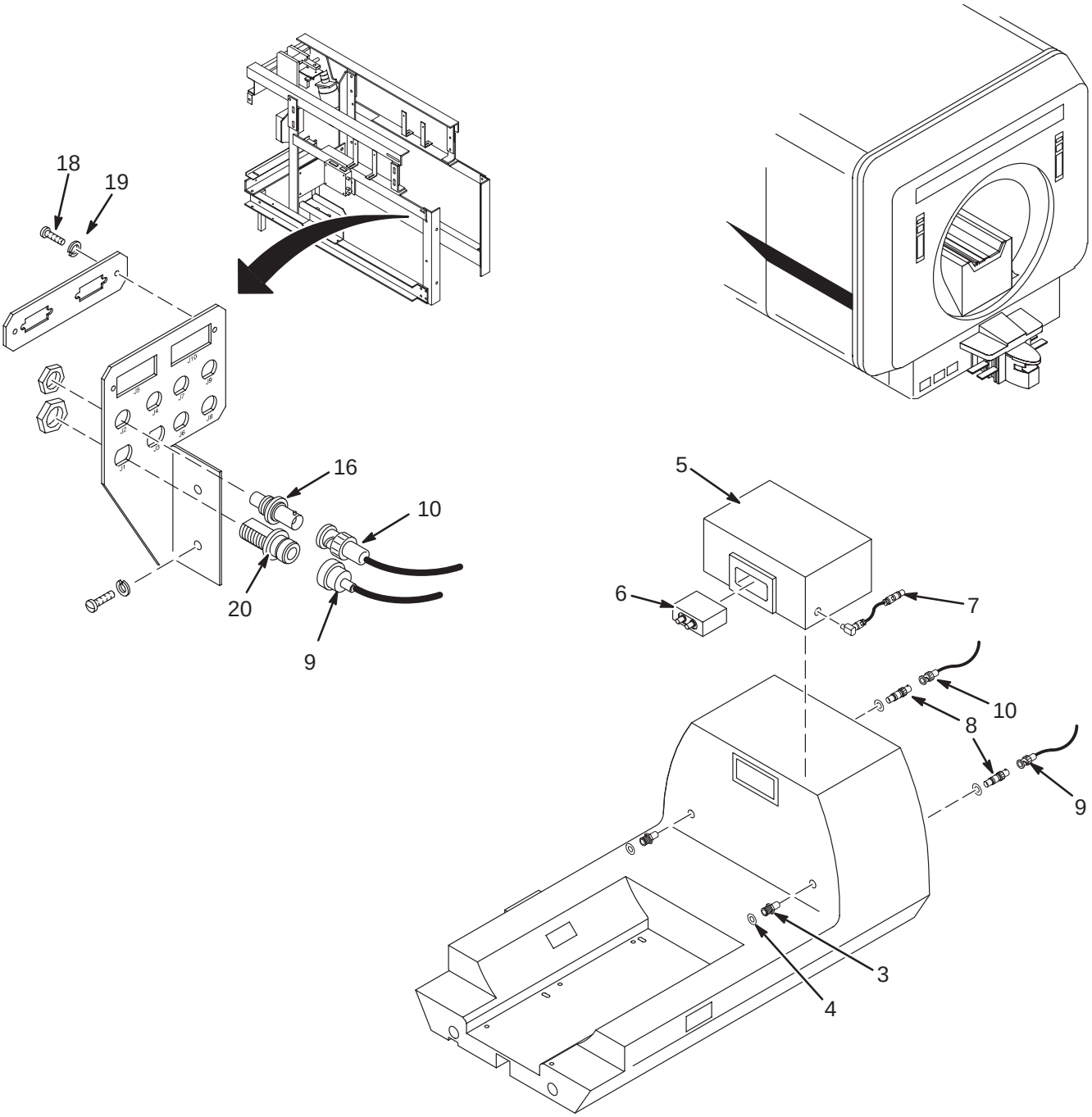

**SPECTRO. COLL. 46–301548G1 REV AG PART OF M1040FF (PG 1) & M1040FK (PG 2)**

| Item | Part Number | FRU | Name | Quantity | Description (Remarks) |
|---|---|---|---|---|---|
| 3 | 46–301166P1 | 2 | RECEPTACLE | 2 | FIXED COUPLER W/HEX NUT & LOCKWASHER |
| 4 | 46–301319P1 | 2 | WASHER | 4 | 1/2” OD, .36 ID, .030 THICK, 300 SST |
| 5 | 2100718 | 1 | SPECT BOX | 1 | SPECTRO TR MODULE (MG2 A16 A7) |
| 6 | 46–282467G4 | 1 | Q D PLUG ASM | 1 | SPECTRO COIL ADAPTER (MG2 A16 A7 A3) |
| 7 | 46–301205P1 | 2 | CABLE | 2 | WHITE RG58/U W/LEMO STRAIGHT & ELBOW |
| 8 | 46–301338P1 | 2 | ADAPTOR | 2 | ADAPTER–BNC PLUG TO LEMO RECEPTACLE. |
| 9 | 46–301690G1 | 2 | CABLE ASM | 1 | (456) MG3 A17 J3 TO MG2 A16 J1 |
| 10 | 46–243775G708 | 2 | CABLE | 1 | (455) MG3–A17–J4 TO MG2–A16–J2 |
| 16 | 46–208990P1 | 2 | ADAPTER | 1 | BNC BULKHEAD ADAPTER (JACK–JACK). |
| 20 | 46–221865P1 | 2 | CONNECTOR | 1 | UG–30, N BULKHEAD, 50 OHM, JACK–JACK |
| 22 | 46–306506P1 | 2 | ADAPTER | 1 | STRAIGHT ADAPTOR, N PLUG TO SC JACK |