g

GE Medical Systems

Technical Publications

Direction 2335383
Revision 0

SONY MOD DRIVE CABLE KIT UPGRADE

Copyright© 2002 by General Electric Co.

Upgrade Documentation

DAMAGE IN TRANSPORTATION

All packages should be closely examined at time of delivery. If damage is apparent, have notation **"damage in shipment"** written on **all** copies of the freight or express bill **before** delivery is accepted or "signed for" by a General Electric representative or a hospital receiving agent. Whether noted or concealed, damage **MUST** be reported to the carrier **immediately** upon discovery, or in any event, within **14** days after receipt, and the contents and containers held for inspection by the carrier. A transportation company will not pay a claim for damage if an inspection is not requested within this **14** day period.

Immediately complete a "Damage Loss Claim Form", available via MS Exchange Mail, after the damage is found.

MS Exchange Path:

Outlook/Public Folder/All Public Folders/Medical Systems/!Global Initiatives/Information Management/Forms/Common Forms/DAMAGE LOSS CLAIM FORM.

Send the completed form to the email address listed in the form.

For more information about the Transportation Claim Procedure, access the GE Medical Systems Intranet and enter the following URL address (case sensitive):

ftp://3.87.40.2/globepro/qualsys/Docs/190016MF.PDF

Rev. 11/15/2000

Direction 2335383 - Language Policy For Service Documentation, Rev A

W A R N I N G

- **THIS SERVICE MANUAL IS AVAILABLE IN ENGLISH ONLY.**
- **IF A CUSTOMER'S SERVICE PROVIDER REQUIRES A LANGUAGE OTHER THAN ENGLISH, IT IS THE CUSTOMER'S RESPONSIBILITY TO PROVIDE TRANSLATION SERVICES.**
- **DO NOT ATTEMPT TO SERVICE THE EQUIPMENT UNLESS THIS SERVICE MANUAL HAS BEEN CONSULTED AND IS UNDERSTOOD.**
- **FAILURE TO HEED THIS WARNING MAY RESULT IN INJURY TO THE SERVICE PROVIDER, OPERATOR OR PATIENT FROM ELECTRIC SHOCK, MECHANICAL OR OTHER HAZARDS.**

AVERTISSEMENT

- **CE MANUEL DE MAINTENANCE N'EST DISPONIBLE QU'EN ANGLAIS.**
- **SI LE TECHNICIEN DU CLIENT A BESOIN DE CE MANUEL DANS UNE AUTRE LANGUE QUE L'ANGLAIS, C'EST AU CLIENT QU'IL INCOMBE DE LE FAIRE TRADUIRE.**
- **NE PAS TENTER D'INTERVENTION SUR LES EQUIPEMENTS TANT QUE LE MANUEL SERVICE N'A PAS ETE CONSULTE ET COMPRIS.**
- **LE NON–RESPECT DE CET AVERTISSEMENT PEUT ENTRAINER CHEZ LE TECHNICIEN, L'OPERATEUR OU LE PATIENT DES BLESSURES DUES A DES DANGERS ELECTRIQUES, MECANIQUES OU AUTRES.**

WARNUNG

- **DIESES KUNDENDIENST-HANDBUCH EXISTIERT NUR IN ENGLISCHER SPRACHE.**
- **FALLS EIN FREMDER KUNDENDIENST EINE ANDERE SPRACHE BENÖTIGT, IST ES AUFGABE DES KUNDEN FÜR EINE ENTSPRECHENDE ÜBERSETZUNG ZU SORGEN.**
- **VERSUCHEN SIE NICHT, DAS GERÄT ZU REPARIEREN, BEVOR DIESES KUNDENDIENST-HANDBUCH ZU RATE GEZOGEN UND VERSTANDEN WURDE.**
- **WIRD DIESE WARNUNG NICHT BEACHTET, SO KANN ES ZU VERLETZUNGEN DES KUNDENDIENSTTECHNIKERS, DES BEDIENERS ODER DES PATIENTEN DURCH ELEKTRISCHE SCHLÄGE, MECHANISCHE ODER SONSTIGE GEFAHREN KOMMEN.**

AVISO

- **ESTE MANUAL DE SERVICIO SOLO EXISTE EN INGLES**
- **SI ALGÚN PROVEEDOR DE SERVICIOS AJENO A GEMS SOLICITA UN IDIOMA QUE NO SEA EL INGLÉS, ES RESPONSABILIDAD DEL CLIENTE OFRECER UN SERVICIO DE TRADUCCIÓN.**
- **NO SE DEBERÁ DAR SERVICIO TÉCNICO AL EQUIPO, SIN HABER CONSULTADO Y COMPRENDIDO ESTE MANUAL DE SERVICIO.**
- **LA NO OBSERVANCIA DEL PRESENTE AVISO PUEDE DAR LUGAR A QUE EL PROVEEDOR DE SERVICIOS, EL OPERADOR O EL PACIENTE SUFRAN LESIONES PROVOCADAS POR CAUSAS ELÉCTRICAS, MECÁNICAS O DE OTRA NATURALEZA.**

ATENÇAO

- **ESTE MANUAL DE ASSISTÊNCIA TÉCNICA SÓ SE ENCONTRA DISPONÍVEL EM INGLÊS.**
- **SE QUALQUER OUTRO SERVIÇO DE ASSISTÊNCIA TÉCNICA, QUE NÃO A GEMS, SOLICITAR ESTES MANUAIS NOUTRO IDIOMA, É DA RESPONSABILIDADE DO CLIENTE FORNECER OS SERVIÇOS DE TRADUÇÃO.**
- **NÃO TENTE REPARAR O EQUIPAMENTO SEM TER CONSULTADO E COMPREENDIDO ESTE MANUAL DE ASSISTÊNCIA TÉCNICA.**
- **O NÃO CUMPRIMENTO DESTE AVISO PODE POR EM PERIGO A SEGURANÇA DO TÉCNICO, OPERADOR OU PACIENTE DEVIDO A' CHOQUES ELÉTRICOS, MECÂNICOS OU OUTROS.**

AVVERTENZA

- **IL PRESENTE MANUALE DI MANUTENZIONE È DISPONIBILE SOLTANTO IN INGLESE.**
- **SE UN ADDETTO ALLA MANUTENZIONE ESTERNO ALLA GEMS RICHIEDE IL MANUALE IN UNA LINGUA DIVERSA, IL CLIENTE È TENUTO A PROVVEDERE DIRETTAMENTE ALLA TRADUZIONE.**
- **SI PROCEDA ALLA MANUTENZIONE DELL'APPARECCHIATURA SOLO DOPO AVER CONSULTATO IL PRESENTE MANUALE ED AVERNE COMPRESO IL CONTENUTO.**
- **NON TENERE CONTO DELLA PRESENTE AVVERTENZA POTREBBE FAR COMPIERE OPERAZIONI DA CUI DERIVINO LESIONI ALL'ADDETTO ALLA MANUTENZIONE, ALL'UTILIZZATORE ED AL PAZIENTE PER FOLGORAZIONE ELETTRICA, PER URTI MECCANICI OD ALTRI RISCHI.**

警告

・このサービスマニュアルは英語版しかありません。

・GEMS以外でサービスを担当される業者が英語以外の言語を要求される場合、翻訳作業はその業者の責任で行うものとさせていただきます。

・このサービスマニュアルを熟読し、理解せずに装置のサービスを行わないでください。

・この警告に従わない場合、サービスを担当される方、操作員あるいは患者さんが、感電や機械的又はその他の危険により負傷する可能性があります。

注意:

- 本维修手册仅存有英文本。
- 非 GEMS 公司的维修员要求非英文本的维修手册时，客户需自行负责翻译。
- 未详细阅读和完全了解本手册之前，不得进行维修。
- 忽略本注意事项会对维修员，操作员或病人造成触电，机械伤害或其他伤害。

REVISION HISTORY

REV	DATE	PRIMARY REASON FOR CHANGE
0	Mar 26, 2002	Initial version. Sony MOD Drive Installation procedure created with Microsoft Word.

PAGE	REV	PAGE	REV	PAGE	REV	PAGE	REV
Title Page	0						
Damage in Trans.	2 -4						
Revision History	5						
Direction 2335383							
6 to 12	0*						

* This revision/letter corresponds to the indicated document's revision control system.

TABLE OF CONTENTS

1- INTRODUCTION 7
Parts List for the 2334581 Sony MOD Cable Kit 7
2- REQUIRED FIELD SUPPLIED TOOLS AND MATERIAL 7
3- INSTALLATION FLOWCHART 8
4- SONY MOD DRIVE INSTALLATION PROCEDURE 9
4-1 Reboot the system to clear errors 9
4-2 Detach the MOD from the Desktop Browser 9
4-3 Uninstall the MOD from the Operating System 9
4-4 Remove Power and Lockout/Tagout Workspace 9
4-5 Remove the SCSI Box from Operators Workspace 9
4-6 Remove the Maxoptix MOD Drive 10
4-7 Configure the SONY MOD Drive 10
4-8 Install the SONY MOD Drive 10
4-9 Invert the SCSI Bay Filler Panel (6 Bay SCSI Boxes ONLY) 11
4-10 Replace the SCSI Box 11
4-11 Remove Lockout/Tagout and Restore Power 11
4-12 Install the MOD to the Operating System 11
4-13 Checking the Operation of the Sony MOD drive 12

1- INTRODUCTION

The purpose of this procedure is to replace the Maxoptix MOD drive with the Sony MOD drive.

The 2334581 Sony MOD Cable Kit consists of the 2199817-16 SCSI Cable and this 2335383 document.

The upgrade requires a replacement of the SCSI ribbon cable to accommodate a necessary twist in the ribbon cable for proper installation of the Sony MOD drive (pin1 is on the opposite side on the Sony MOD drive as compared to the Maxoptix MOD drive).

It is critical that all the steps are completed in the order listed. Failure to do so may result in intermittent operation of the MOD drive and Signa desktop archive functions.

Parts List for the 2334581 Sony MOD Cable Kit

Part Number	Quantity	Description
2199817-16	1	SCSI Cable
2335383	1	This document

2- REQUIRED FIELD SUPPLIED TOOLS AND MATERIAL

- Medium Phillips screwdriver
- Small flat head screwdriver
- Grounding wrist strap
- ESD Kit
- MOD Media

3- INSTALLATION FLOWCHART

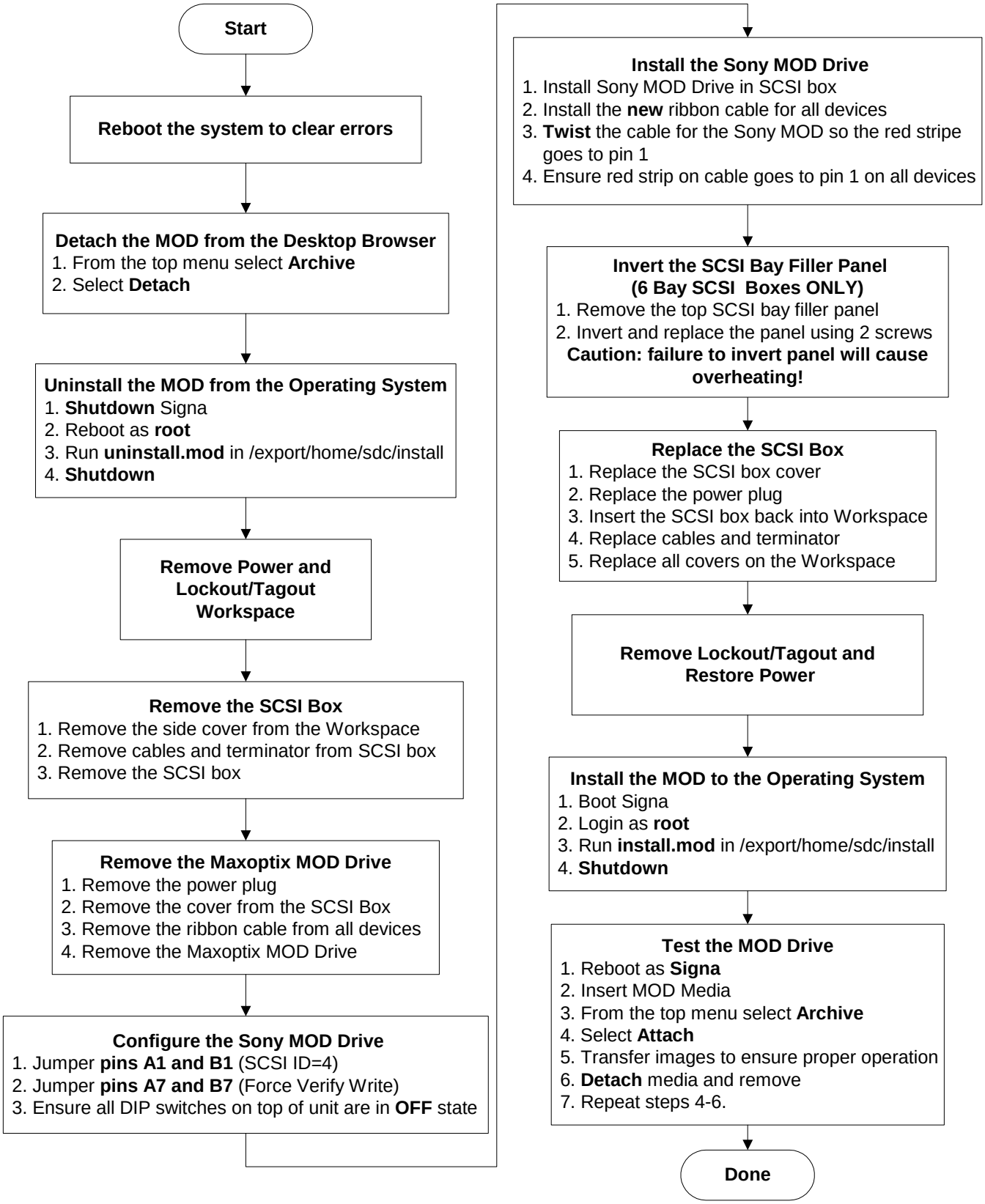

4- SONY MOD DRIVE INSTALLATION PROCEDURE

The following sequence is required to make sure that both the hardware configuration and the software configuration know what drive type is installed.

4-1 Reboot the system to clear errors

4-2 Detach the MOD from the Desktop Browser

1. Open up the Image Browser Desktop.
2. From the top menu select "Archive" .
3. If the MOD is attached to the Signa Applications Software then select "Deteach".
4. Close the desktop.

4-3 Uninstall the MOD from the Operating System

1. **Shutdown** Signa Applications.
2. At the Login Menu type: **root** [enter]. Password: **operator** (Default)

Note

If the "root owner" password was changed, you may need to see the site Network Administrator to get the correct password.

3. From the Toolchest that appears select: **Desktop**
4. Select Open Unix Shell
5. Type: **cd /export/home/sdc/install** [enter]
6. Type: **pwd** [enter] (Make sure you are at /export/home/sdc/install)
7. Type: **uninstall.mod** [enter] (essential to release the mod from the Operating System).
   System response:
   setenv SDC_REMOTEHOST $PREFS/SdCRHosts
   done updating. SdCrc with mod.edit
   application removed.

8. **Close the UNIX Shell** by selecting **exit** from the drop down menu.
9. From the **Toolchest** select **System**
10. Select **Shutdown**.

4-4 Remove Power and Lockout/Tagout Workspace

Refer to appropriate Lockout/Tagout procedures.

4-5 Remove the SCSI Box from Operators Workspace

Refer to the **Work Space Cabinet Replacements** procedures available on the Signa LX Service Methods CD 2160623-1 (OW2REA2.DOC for Octane computers) and on the Intranet Site at: http://3.87.118.28/optec3/common/8xdocs/ow/ow2rea2.pdf (for Octane computers).

4-6 Remove the Maxoptix MOD Drive

1. Remove the ribbon cable from all devices and **DISCARD**.
2. Remove the power cable to the MOD drive.
3. Remove the Maxoptix MOD drive by removing 4 screws (2 each side).

4-7 Configure the SONY MOD Drive

Verify the SCSI ID jumper is across A1-B1 (SCSI ID=4), and the Force Verify for Write Command jumper is across A7-B7, as shown in Illustration 4-1.

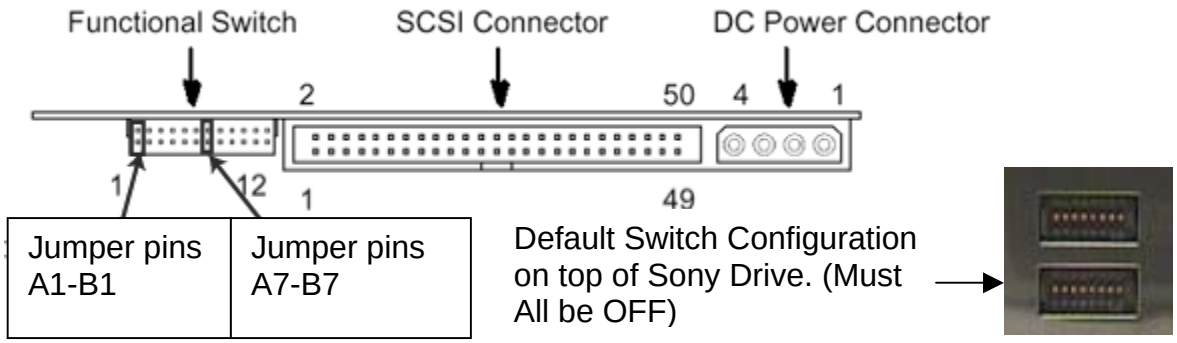

SONY SMO-F551-SD MOD DRIVE
ILLUSTRATION 4-1

4-8 Install the SONY MOD Drive

1. Install the Sony MOD Drive in the SCSI box, slot #2, using 4 screws.
2. Install the power cable to the MOD drive.
3. Install the **new** ribbon cable to all other SCSI devices. Ensure the red stripe on the cable is aligned with pin 1 on all devices.
4. **Twist** the ribbon cable to properly align the red stripe and pin 1 on the Sony MOD drive, and connect the ribbon cable to the Sony MOD drive, as shown in illustration 4-2.

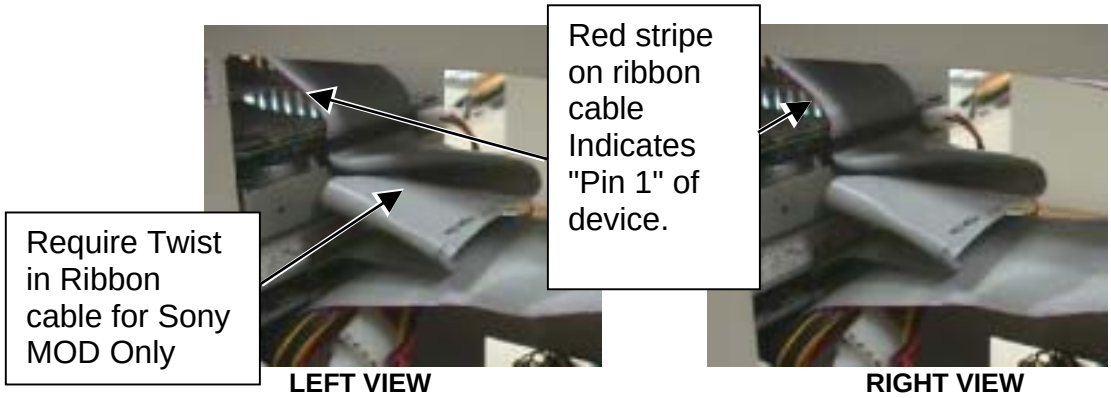

ILLUSTRATION 4-2

4-9 Invert the SCSI Bay Filler Panel (6 Bay SCSI Boxes ONLY)

This step only applies to SCSI boxes with 6 bays, and does not apply to the SCSI boxes with 5 bays (first bay is labeled #2).

1. Remove the top SCSI bay filler panel.
2. Invert and replace the panel using 2 screws (all 4 holes will not align). See illustration 4-3.

CAUTION

If you have a SCSI filler panel installed above the MOD drive, it is critical that it is inverted. Failure to invert this panel will cause heat damage to the Sony MOD drive.

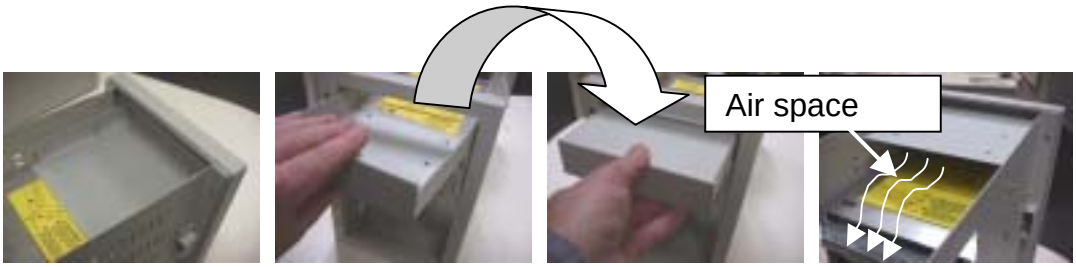

INVERT THE SCSI FILLER PANEL
ILLUSTRATION 4-3

4-10 Replace the SCSI Box

1. Slide the cover back onto the SCSI box enclosure.
2. Attach the bracket to the bottom of the box.
3. Slide the SCSI Box into the cabinet. Gently lift up the back of the unit and slide it towards the front of the cabinet until the box is flush with the front of the cabinet.
4. Attach the top bracket.
5. Re-attach terminator to the back of the box.
6. Re-attach SCSI and power cables to the SCSI Expansion box.
7. Re-install all the covers on the Workspace.

4-11 Remove Lockout/Tagout and Restore Power

4-12 Install the MOD to the Operating System

1. Power Up the system.
2. At the Login Menu type: **root** [enter]. Password: **operator** (Default)
3. From the Toolchest that appears select: **Desktop**
4. Select **Open Unix Shell**
5. Type: **cd /export/home/sdc/install** [enter]
6. Type: **install.mod** [enter] (essential to attach the MOD to the Operating System).
   System response:
   setenv SDC_REMOTEHOST $PREFS/SdCRHosts
   application declared
   done.
   to actually run with the MOD installed, logout and login as the product user
7. Close the UNIX Shell

8. From the **Toolchest** select **System**
9. Select **Shutdown**.

4-13 Testing the Operation of the Sony MOD drive

1. Select **Restart**.
2. At the Login Screen click on the **Signa** icon, password: **adw2.0**.
3. With Signa Software Applications up and running, open the Image Browser **Desktop**.
4. Insert an MOD media into the drive.

CAUTION

Many failures are due to inserting the media with unnecessary force. Excessive force may eventually cause mis-alignment of the read/write heads and drive tray. This could lead to intermittent archive problems or the complete failure of the device.

5. From the menu options at the top of the Browser Window select **Archive**.
6. **Attach** the MOD to the Signa Applications Software.

Note

Attaching and Detaching media containing exams can take up to several minutes. An empty media takes approximately 25 seconds to attach and detach.

7. Transfer a few exams to the MOD that are not essential to the customer. (Customer has already archived).
8. Recover these exams back to Signa. Make sure the drive is functioning properly.
9. Again transfer a few exams to the MOD that are not essential to the customer. (Customer has already archived).
10. **Detach** the MOD, Quit Signa Archive Application and close the browser.
11. Push the button on the front of the drive to withdraw the media.
12. Re-insert the media.
13. **Attach** the MOD to the Signa Applications Software.
14. Recover the exams back to Signa, to make sure the drive is functioning properly.
15. **Detach** the MOD Media.
16. Push the button on the front of the drive to withdraw the media.