GE Medical Systems

Technical Publications

Direction 2216373
Revision 5

Signa® Horizon™ LX Singa Video Option Installation - Octane

Copyright© 2001 by General Electric Co.

Operating Documentation

DAMAGE IN TRANSPORTATION

All packages should be closely examined at time of delivery. If damage is apparent, have notation "**damage in shipment**" written on **all** copies of the freight or express bill **before** delivery is accepted or "signed for" by a General Electric representative or a hospital receiving agent. Whether noted or concealed, damage MUST be reported to the carrier immediately upon discovery, or in any event, within 14 days after receipt, and the contents and containers held for inspection by the carrier. A transportation company will not pay a claim for damage if an inspection is not requested within this 14 day period.

Immediately complete "**Damage Loss Claim Form**" after damage is found. Form is available via MS Exchange Mail at Outlook/Public Folder/All Public Folders/Medical Systems/!Global Initiatives/Information Management/Forms/Common Forms/Damage Loss Claim Form. Send completed form to e-mail address listed on form.

For more information about the Transportation Claim Procedure, access the GE Medical Systems Intranet and enter the following URL address:
ftp://3.87.40.2/globepro/qualsys/Docs/190016MF.PDF

Rev. 11/15/2000

WARNING

- **THIS SERVICE MANUAL IS AVAILABLE IN ENGLISH ONLY.**
- **IF A CUSTOMER'S SERVICE PROVIDER REQUIRES A LANGUAGE OTHER THAN ENGLISH, IT IS THE CUSTOMER'S RESPONSIBILITY TO PROVIDE TRANSLATION SERVICES.**
- **DO NOT ATTEMPT TO SERVICE THE EQUIPMENT UNLESS THIS SERVICE MANUAL HAS BEEN CONSULTED AND IS UNDERSTOOD.**
- **FAILURE TO HEED THIS WARNING MAY RESULT IN INJURY TO THE SERVICE PROVIDER, OPERATOR OR PATIENT FROM ELECTRIC SHOCK, MECHANICAL OR OTHER HAZARDS.**

AVERTISSEMENT

- **CE MANUEL DE MAINTENANCE N'EST DISPONIBLE QU'EN ANGLAIS.**
- **SI LE TECHNICIEN DU CLIENT A BESOIN DE CE MANUEL DANS UNE AUTRE LANGUE QUE L'ANGLAIS, C'EST AU CLIENT QU'IL INCOMBE DE LE FAIRE TRADUIRE.**
- **NE PAS TENTER D'INTERVENTION SUR LES ÉQUIPEMENTS TANT QUE LE MANUEL SERVICE N'A PAS ÉTÉ CONSULTÉ ET COMPRIS.**
- **LE NON–RESPECT DE CET AVERTISSEMENT PEUT ENTRAÎNER CHEZ LE TECHNICIEN, L'OPÉRATEUR OU LE PATIENT DES BLESSURES DUES À DES DANGERS ÉLECTRIQUES, MÉCANIQUES OU AUTRES.**

WARNUNG

- **DIESES KUNDENDIENST-HANDBUCH EXISTIERT NUR IN ENGLISCHER SPRACHE.**
- **FALLS EIN FREMDER KUNDENDIENST EINE ANDERE SPRACHE BENÖTIGT, IST ES AUFGABE DES KUNDEN FÜR EINE ENTSPRECHENDE ÜBERSETZUNG ZU SORGEN.**
- **VERSUCHEN SIE NICHT, DAS GERÄT ZU REPARIEREN, BEVOR DIESES KUNDENDIENST-HANDBUCH NICHT ZU RATE GEZOGEN UND VERSTANDEN WURDE.**
- **WIRD DIESE WARNUNG NICHT BEACHTET, SO KANN ES ZU VERLETZUNGEN DES KUNDENDIENSTTECHNIKERS, DES BEDIENERS ODER DES PATIENTEN DURCH ELEKTRISCHE SCHLÄGE, MECHANISCHE ODER SONSTIGE GEFAHREN KOMMEN.**

AVISO

- **ESTE MANUAL DE SERVICIO SÓLO EXISTE EN INGLÉS**
- **SI ALGÚN PROVEEDOR DE SERVICIOS AJENO A GEMS SOLICITA UN IDIOMA QUE NO SEA EL INGLÉS, ES RESPONSABILIDAD DEL CLIENTE OFRECER UN SERVICIO DE TRADUCCIÓN.**
- **NO SE DEBERÁ DAR SERVICIO TÉCNICO AL EQUIPO, SIN HABER CONSULTADO Y COMPRENDIDO ESTE MANUAL DE SERVICIO.**
- **LA NO OBSERVANCIA DEL PRESENTE AVISO PUEDE DAR LUGAR A QUE EL PROVEEDOR DE SERVICIOS, EL OPERADOR O EL PACIENTE SUFRAN LESIONES PROVOCADAS POR CAUSAS ELÉCTRICAS, MECÁNICAS O DE OTRA NATURALEZA.**

ATENÇÃO

- **ESTE MANUAL DE ASSISTÊNCIA TÉCNICA SÓ SE ENCONTRA DISPONÍVEL EM INGLÊS.**
- **SE QUALQUER OUTRO SERVIÇO DE ASSISTÊNCIA TÉCNICA, QUE NÃO A GEMS, SOLICITAR ESTES MANUAIS NOUTRO IDIOMA, É DA RESPONSABILIDADE DO CLIENTE FORNECER OS SERVIÇOS DE TRADUÇÃO.**
- **NÃO TENTE REPARAR O EQUIPAMENTO SEM TER CONSULTADO E COMPREENDIDO ESTE MANUAL DE ASSISTÊNCIA TÉCNICA.**
- **O NÃO CUMPRIMENTO DESTE AVISO PODE POR EM PERIGO A SEGURANÇA DO TÉCNICO, OPERADOR OU PACIENTE DEVIDO A' CHOQUES ELÉTRICOS, MECÂNICOS OU OUTROS.**

AVVERTENZA

- **IL PRESENTE MANUALE DI MANUTENZIONE È DISPONIBILE SOLTANTO IN INGLESE.**
- **SE UN ADDETTO ALLA MANUTENZIONE ESTERNO ALLA GEMS RICHIEDE IL MANUALE IN UNA LINGUA DIVERSA, IL CLIENTE È TENUTO A PROVVEDERE DIRETTAMENTE ALLA TRADUZIONE.**
- **SI PROCEDA ALLA MANUTENZIONE DELL'APPARECCHIATURA SOLO DOPO AVER CONSULTATO IL PRESENTE MANUALE ED AVERNE COMPRESO IL CONTENUTO.**
- **NON TENERE CONTO DELLA PRESENTE AVVERTENZA POTREBBE FAR COMPIERE OPERAZIONI DA CUI DERIVINO LESIONI ALL'ADDETTO ALLA MANUTENZIONE, ALL'UTILIZZATORE ED AL PAZIENTE PER FOLGORAZIONE ELETTRICA, PER URTI MECCANICI OD ALTRI RISCHI.**

警告

・このサービスマニュアルには英語版しかありません。
・ＧＥＭＳ以外でサービスを担当される業者が英語以外の言語を要求される場合、翻訳作業はその業者の責任で行うものとさせていただきます。
・このサービスマニュアルを熟読し理解せずに、装置のサービスを行わないで下さい。
・この警告に従わない場合、サービスを担当される方、操作員あるいは患者さんが、感電や機械的又はその他の危険により負傷する可能性があります。

注意:

- 本维修手册仅存有英文本。
- 非 GEMS 公司的维修员要求非英文本的维修手册时，客户需自行负责翻译。
- 未详细阅读和完全了解本手册之前，不得进行维修。
- 忽略本注意事项会对维修员，操作员或病人造成触电，机械伤害或其他伤害。

TABLE OF CONTENTS

TABLE OF CONTENTS **1**
1- INTRODUCTION **2**
1-1 Horizon 8.x Options Installed by the Manual 2
1-2 Contents of Video Option 2
2- VIDEO BOARD INSTALLATION **3**
2-1 Removing XIO Module 3
2-2 Verifying Proper Installation 7
2-3 Select Video Format 8
2-4 Video Driver Install 8
3- VIDEO SET-UP **10**
3-1 Video Panel Set-up and Operation 10
4- INSTALLING THE O2CAM DIGITAL CAMERA **13**
5- TROUBLESHOOTING **15**
REVISION HISTORY **16**

1- INTRODUCTION

The Octane Video package enables you to conduct video conferences, output graphics to videotape, display video in a graphics window, and save (capture) video to hard disk.

Note

Before starting, take time to review the entire installation procedure for this option. Verify that the installation can be completed before shutting the customer down by checking availability of the pre-requisites that are required and other items that may be needed.

1-1 Horizon 8.x Options Installed by the Manual

This manual describes installation of the following options:

- Catalog M1090TZ - VCR Interface Kit
- Catalog M1090SY - Video Conferencing Kit (M1090TZ is a prerequisite)

1-2 Contents of Video Option

M1090TZ is for Signa Horizon 8.x Octane systems only. The following items are contained in the kit:

- Octane Personal Video Option board
- Cable Guard
- Audio cable
- O2Cam
- Wrist strap
- BNC/RCA adapters
- Screwdriver
- Long screw and spacer
- Octane Personal Video Installation Guide
- Digital Media CD (do not use)

Note

Do not use the Digital Media CD supplied with the kit. The VCR setup information is located on the MR Service Methods CDROM.

2- VIDEO BOARD INSTALLATION

The Video Board is to be installed in the XIO module slot B. The XIO module is located on the right side on the back of the chassis (looking from the back). See Illustration 2-1.

Note

The Graphics Board is always in slot A and (covering) slot D. The Video Board must be in slot B.

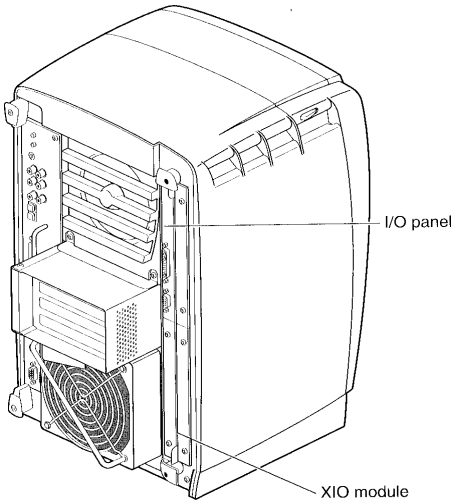

XIO PANEL LOCATION
ILLUSTRATION 2-1

2-1 Removing XIO Module

To ensure operator safety you must log out from host computer and remove power to the Operator Workspace on the PDU. Wait 5 minutes before removing the XIO module.

WARNING!

THE HEAT SINKS ON THE XIO BOARDS BECOME VERY HOT. WAIT 5 MINUTES AFTER POWERING OFF THE OCTANE WORKSTATION BEFORE YOU REMOVE THE XIO MODULE.

1. Remove all cables from the XIO module. See Illustration 2-2.

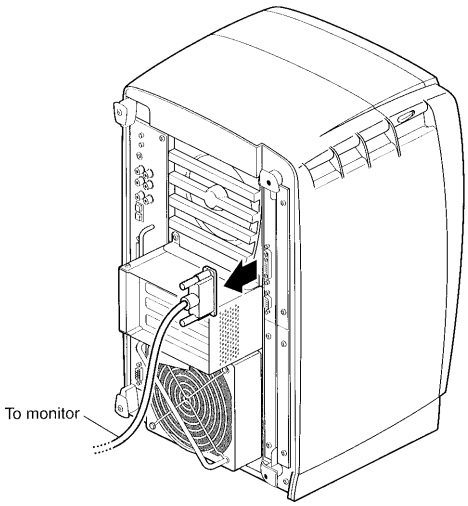

CABLE REMOVAL
ILLUSTRATION 2-2

2. Attach a wrist strap (one is provided in the kit).

CAUTION

The components inside the OCTANE workstation are extremely sensitive to static electricity; you must wear a wrist strap while replacing parts inside the workstation.

3. Loosen the fixed screws in the XIO module handles with a Phillips screwdriver until the screws are disconnected from the chassis. See illustration 2-3.

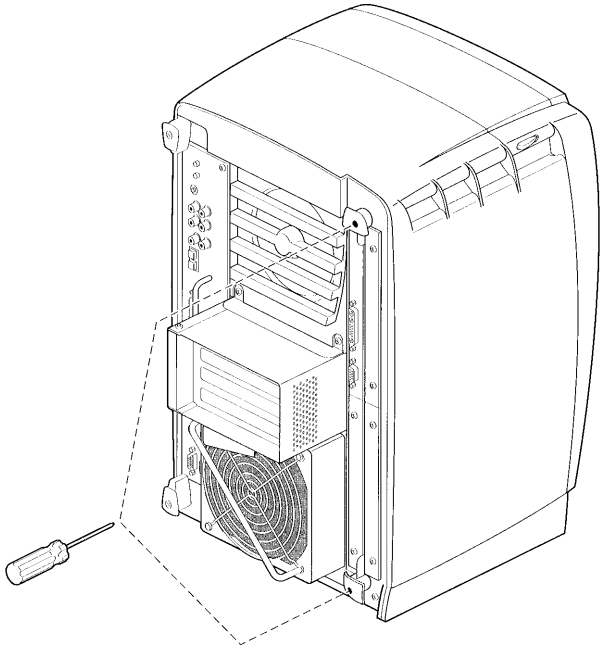

REMOVING THE XIO MODULE SCREWS
ILLUSTRATION 2-3

4. Grasp the handles and pull until the XIO module protrudes about an inch from the chassis. The handles and XIO module move out about one inch before the I/O panels move.

5. Continue to pull on the handles until the XIO module releases from the OCTANE workstation. See Illustration 2-4.

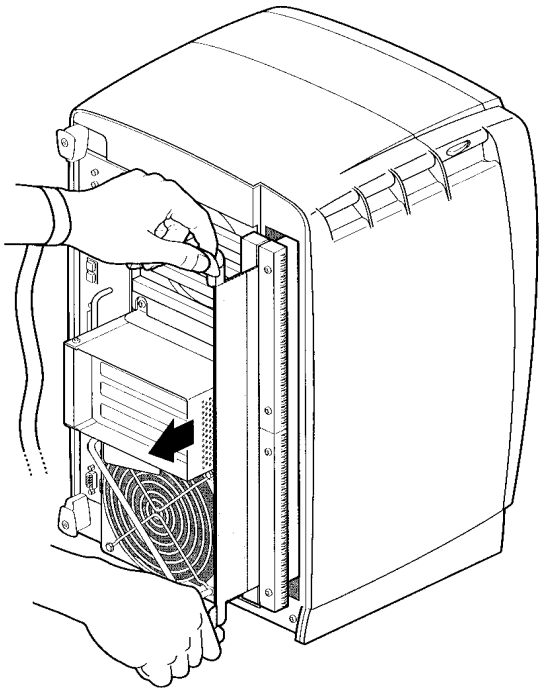

REMOVING THE XIO MODULE
ILLUSTRATION 2-4

6. Support the XIO module along the bottom edge as you remove it from the chassis. See Illustration 2-5.

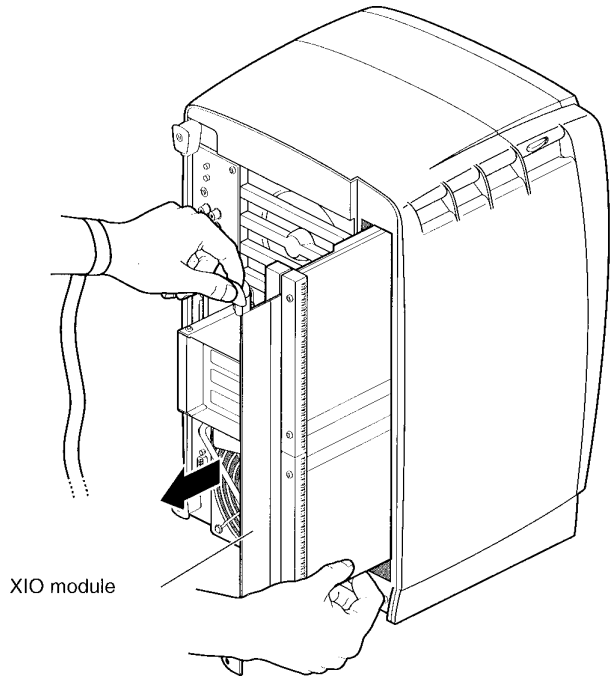

ILLUSTRATION 2-5

7. Refer to the Octane Personal Video Installation Guide, pages 11 - 24 for installing the Video Option Board.

2-2 Verifying Proper Installation

After installation, power-up the Octane Workstation and perform the following steps to verify that the Video board is properly installed:

1. At the Service Desktop, open a **[C-shell]**.

2. At the command prompt, type: **hinv <Enter>**

3. Look for a line similar to this: `Personal Video: unit 1, revision 1.0.` If this line appears, go to section 2-6.

Note

The revision number on this step may not be 1.0, it is dependent on the revision of the video board. Beginning with Release 8.3 systems, this line may not be displayed until after installing the video driver in Section 2-4.

4. If you do not see this type of line, follow the instructions for powering off the Octane, removing the XIO module, and installing the Video board again to be sure the Video board was properly installed.

2-3 Select Video Format

In order to record graphics or display videos on a graphics monitor, the video and graphics signals must be generated at the same rate. When you synchronize the signals, you *framelock* the video and graphics. Framelocking eliminates tearing and motion artifacts that occur if the video and graphics are not synchronized. Choosing NSTC setting from the Input Timing option does not automatically lock graphics to video.

From the Service Desktop, click on **[Install]** to start up the Guided Install/Configuration tool. Login as *root;* password *operator.* Select the **VCR Setup tab**, see Illustration 2-6. Enter the preferred video standard (NTSC or PAL). Select **[Configure]** to set the video standard you selected. Select **File** -> **Quit** to close the Guided Install GUI.

GUIDED INSTALL GUI
ILLUSTRATION 2-6

2-4 Video Driver Install

Beginning with Release 8.3, the video driver is not loaded with the operating software load. Follow these steps to install the video driver software:

1. Insert the IRIX 6.5 Boot/Update CDROM into the CDROM drive.

2. Open a C-shell on the Service Desktop.

3. Type: **su root <Enter>**

4. Enter **operator** for password.

5. Type: **mediad <Enter>** (to mount the CDROM drive).

6. Type: **cd /CDROM/opt <Enter>**

7. Type: **vidsetup <Enter>**
   This starts the install script and a lot of screen output will scroll by in the C-shell, and it will be apparent that file installs/removals are taking place. Then the last output to be displayed is below:

```
Reboot to start using the reconfigured kernel.
**************************************************
**                                              **
**                                              **
**      Remember to reboot the system before    **
**      attempting to use the video interface   **
**                                              **
**************************************************
{sdc@name}
```

8. Type the following to verify the video driver was loaded:
   showprods –D1 <Enter>

   examine the products that are loaded and ensure the following is listed:

```
evo        <date  installed>    OCTANE  Personal  Video  Execution
Environment, 6.5.4m
```

9. Type: **mediad –k** <Enter> (to release the CDROM device).

10. Remove the Update/Boot CDROM.

11. Reboot Signa by selecting **[System Shutdown]** on Service Desktop.

3- VIDEO SET-UP

3-1 Video Panel Set-up and Operation

Follow the procedure to verify the Video Interface Operation using a VCR.

Note

The video cable needed to connect to the VCR is not included in the kit, it is customer supplied.

Note

The VCR input has to be set to LINE to accept video.

1. Select the **[Display]** desktop.

2. Select a multiple slice exam.

3. Before activating the viewer, open a command window. This is done by moving the cursor to wallpaper, then hold the right mouse button and select **Service Tools**, then **Command Window**.

4. When the Terminal window opens, drag it to the upper left corner of the screen.

5. Click on the Viewer to display the exam that was selected in step 2.

5. Click back on the Terminal window and type the following: **vcp <Enter>.** A video panel will open. Refer to Illustration 3-1 for the Video Panel set-up.

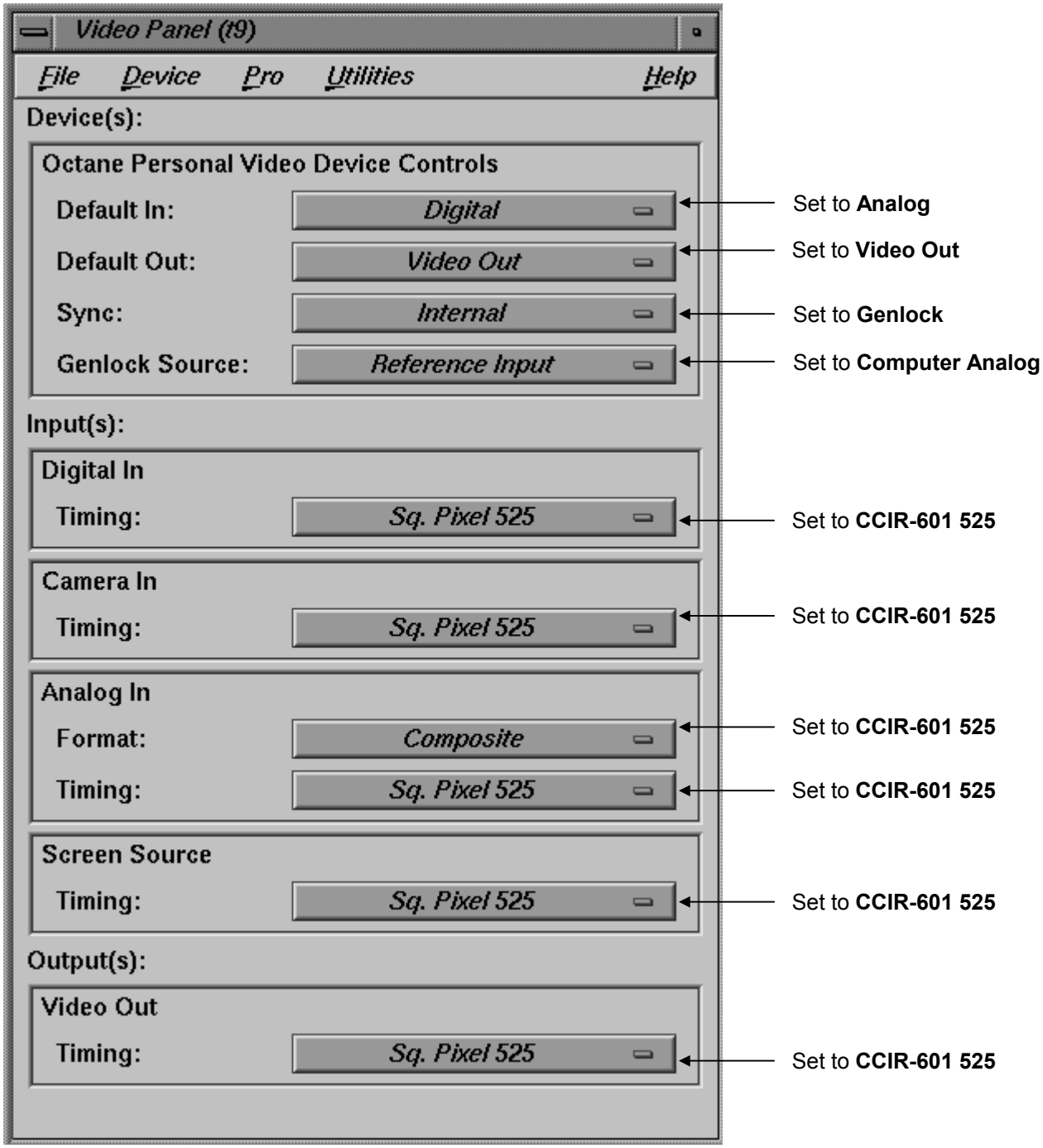

VIDEO PANEL SETUP
ILLUSTRATION 3-1

7. Select **Utilities** on the video panel toolbar, then select **Live Video Out**.

   a. A box with white borders will appear which can be dragged anywhere on the screen by positioning the cursor on the white border and holding down the left mouse button.

   Note

   A Live Video button will appear. There are display options available by placing the cursor on the button and holding down the right mouse button.

8. Close the Terminal window by typing **exit <Enter>** at the prompt.

9. Close the Video Panel by clicking on the dot in the upper right corner of the window.

10. Setup the display by selecting the **[Paging]** button.

    a. Set the Start Slice, End Slice, and Frames per Second.

    b. Click on the **[Projector]** (projector symbol) button. The exam will compose, then start scrolling at the set frame rate.

11. Position the Live Video frame over the area of interest and press record on the VCR.

12. When complete, stop recording, select **[Browser]**, then right mouse click on the Live Video button to select **Quit**.

4- INSTALLING THE O2CAM DIGITAL CAMERA

Illustration 4-1 is to be used to identify the ports on the Video board .

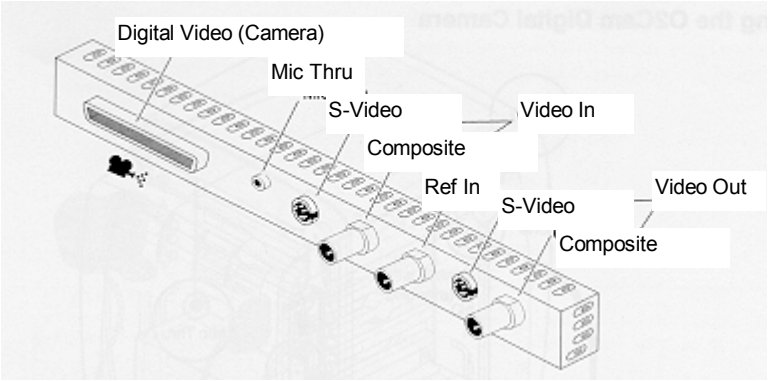

IDENTIFYING VIDEO BOARD PORTS
ILLUSTRATION 4-1

Use Illustration 4-2 to familiarize yourself with the O2Cam.

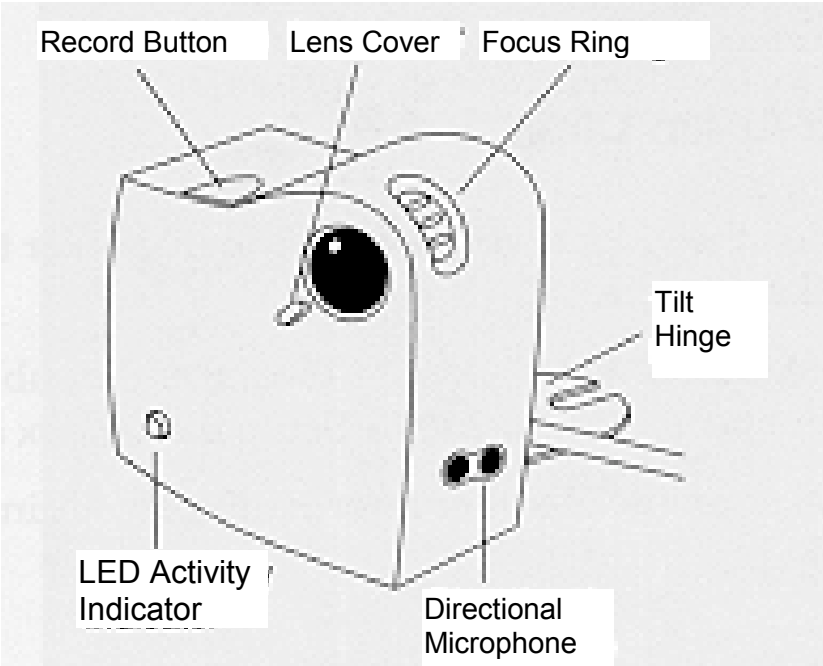

CAMERA FEATURES
ILLUSTRATION 4-2

Attaching the camera requires attaching the audio and camera cables supplied in the kit.

1. Attach the audio cable to the Mic Thru port on the Video board and the microphone port on the system module as shown in Illustration 4-3.

2. Attach the O2Cam to the digital video (camera) connector. See Illustration 4-3.

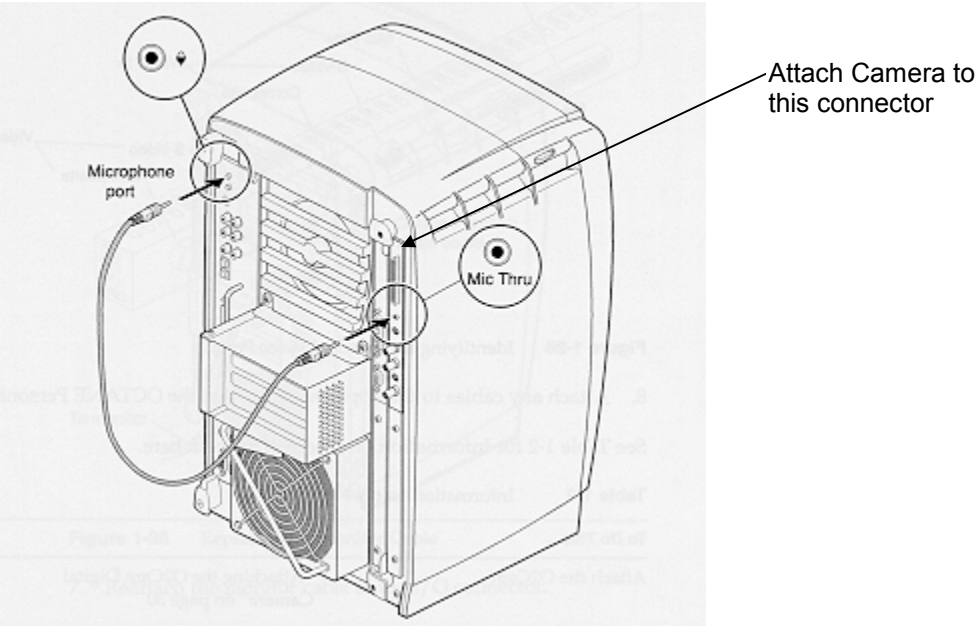

INSTALLAING CABLES AND CAMERA
ILLUSTRATION 4-3

3. Power up the Octane computer.

4. Install the Video Conferencing Software Option (2209602). Refer to the appropriate Host Software Install procedure on the MR Service Methods CD-ROM (“Option Install” section).

5- TROUBLESHOOTING

From time to time on Signa application startup, the VCP video capture box will be visible, but the control buttons will be missing. If this happens, the VCP program must be terminated and restarted to regain full functionality. Do the following:

1. Go to the Service Desktop and start a C Shell.
2. In the command line type: **killall videoout <Enter>**
3. Then to restart the application type at the command line: **vcp <Enter>**

REVISION HISTORY

REV	DATE	AUTHOR	PRIMARY REASONS FOR CHANGE
0	May 12, 1998	K. L-P	Initial version
1	Sep 30, 1998	K. L-P	Added Verify Install (sec 2-4) and Video Interface Operation (sec 3-3)
2	Sep 30, 1999	J. Wolak	Added Release 8.3 video driver install instructions.
3	Jan 21, 2000	J. Wolak	Updated some of the 8.3 driver install steps
4	Sep. 9, 2000	M. Jones	Deleted references specific to release 8.3 and release 8.25. Minor format changes.
5	Jun 11, 2001	Hawthorne	Added section 5, Troubleshooting to address what to do if VCP control box becomes hidden.

GE Medical Systems

GE Medical Systems: Telex 3797371
P.O. Box 414, Milwaukee, Wisconsin 53201

U.S.A.

(Asia, Pacific, Latin America, North America)

GE Medical Systems – Europe: Telex 2611794
Shortlands, Hammersmith, London W6 8BX U.K.