SECTION 4 – PENETRATION PANEL

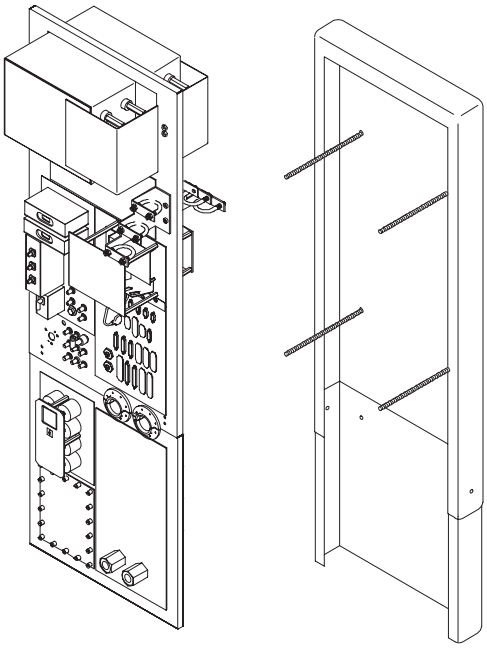

PENETRATION PANEL

PENETRATION PANEL COVER

TABLE OF CONTENTS

SECTION		PAGE
4–1	**PENETRATION PANELS**	4–2
	Contains information on non–EXCITE, EXCITE, and TwinSpeed Penetration Panels	
	PENETRATION PANEL w/o MULTICOIL . . . 46–301383G12	4–3
	PENETRATION PANEL w/o MULTICOIL . . . 46–301383G18	4–4
	PENETRATION PANEL w/MULTICOIL . . . 46–301383G13	4–6
	PENETRATION PANEL w/MULTICOIL . . . 46–301383G19	4–7
	TwinSpeed PENETRATION PANEL w/MULTICOIL . . . 46–301383G17	4–9
	EXCITE II PENETRATION PANEL w/MULTICOIL . . . 2377529	4–11
	EXCITE II TwinSpeed PENETRATION PANEL w/MULTICOIL . . . 2377529–2	4–13
4–2	**PENETRATION PANEL COVERS**	4–26
	Contains information on Fixed, T/R, and Mobile covers	
	PENETRATION PANEL COVER – FIXED . . . 46–317126G3	4–26
	PENETRATION PANEL COVER – MOBILE & T/R . . . 46–317126G4	4–26

4–1 PENETRATION PANELS

PENETRATION PANEL WITHOUT MULTICOIL **46–301383G12 & G18**

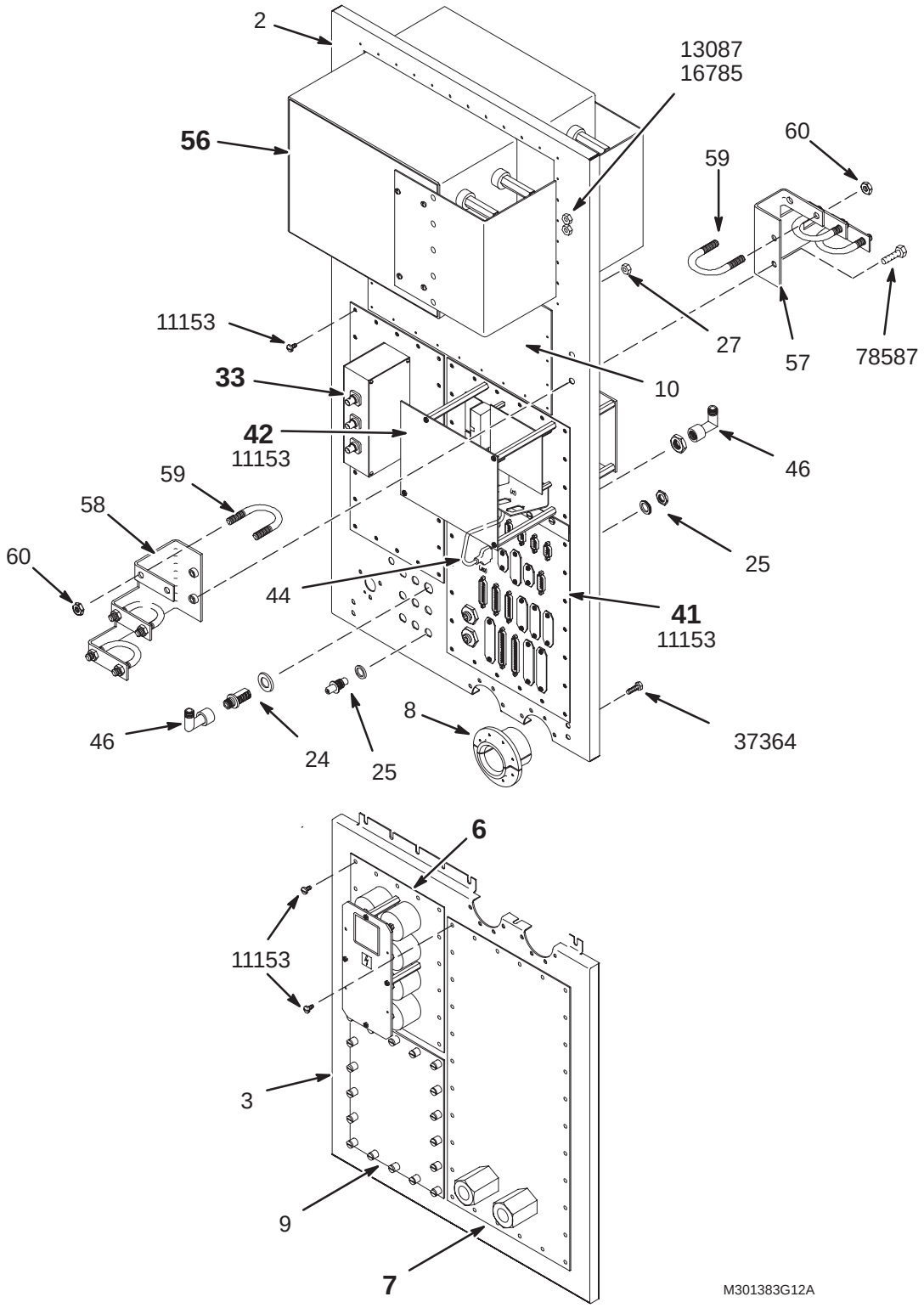

PEN PANEL w/o MULTICOIL 46–301383G12 FRU N (PART OF M1000PM, M1020PM, M1030PM)
(PART OF M1000PN, M1020PN M1030PN0
(PART OF M1800PM, M1810PM, M1820PM)
(PART OF M1800PN, M1810PN M1820PN)

Item	Part Number	FRU	Name	Quantity	Description (Remarks)
2	2133755	N	PANEL	1	UPPER PENETRATION PANEL, ALUMINUM
3	2133756	2	I/F WALL	1	LOWER PENETRATION PANEL SECTION
6	46–301385G4	N	FILTER ASM	1	SHIELD COOLER/BLOWER FILTER PANEL **(SEE PAGE 4–16)**
7	2121610	N	PLATE ASM	1	INSERT PLATE W/WAVE GUIDES **(SEE PAGE 4–17)**
8	46–301177P1	2	ADAPTER	2	HELIUM LINE FEED THROUGH GUIDE
9	46–282629G1	2	COVER ASM.	1	MAGNET RAMP PORT, PP1 A6
10	46–282638G1	2	COVER ASM.	1	BLANK RESISTIVE SHIM COVER PLATE
20	46–208937P6	2	NUT	23	#10–32 NUT LOCK, NYLOCK SST
24	46–221865P1	2	CONNECTOR	1	UG–30, N BULKHEAD, 50–OHM, JACK–JACK
25	46–208990P1	2	CONNECTOR	8	50 OHM BNC BULKHEAD ADAP'R JACK–JACK
27	46–208937P5	2	NUT	24	#8–32 LOCK NUT, NYLOCK SST
33	46–301353G2	N	PANEL ASM	1	1000V DYNAMIC DISABLE FILTER PANEL **(SEE PAGE 4–19)**
41	46–307572G3	N	PANEL ASM	1	SUB–D CABLE FILTER PANEL, UFI SYSTEM **(SEE PAGE 4–23)**
42	46–328039G1	2	REPEATER ASM	1	REPEATER PANEL, PP1 A17 **(SEE PAGE 4–15)**
44	46–243775G860	2	CABLE	1	PP1–J89 TO PP1–A17–J2, 2–FT, 15–COND
46	46–221865P3	2	CONNECTOR	2	UG–27B RT–ANGLE N, 50–OHM JACK–PLUG
50	46–301216P1	2	PLATE	2	BLANK COVER PLATE FOR J60/61 HE LINE
56	46–320232G1	1	GRAD FILTER	1	GRADIENT FILTER ASM **(SEE PAGE 4–24)**
57	2236923	2	BRACKET	1	EXAM SIDE BRACKET
58	2236924	2	BRACKET	1	EQUIP SIDE BRACKET
59	2113244–2	2	U–BOLT	6	1.25" INSIDE DIA. 3/8–16 THD. 303SST
60	46–208935P10	2	NUT	16	3/8–16 .625 HEX X .250 THK BRASS
70	46–208560P82	2	SCREW	136	SCREW, 10–32 X 3/8 BHMS, SS
71	46–208932P3	2	SCREW	8	SCREW, CAP 5/16–18 X 3/4 HEX HD SS
72	46–208935P9	2	NUT	8	5/16–18, .563 HEX X .219 THK, BRASS
73	46–208560P102	2	SCREW	16	SCREW, 10–32 X 5/8 BHMS, SS
74	1000904P425	2	WASHER	7	0.2 ID, 0.5 OD, 04 THK, B11H89C
75	46–208560P110	2	SCREW	36	SCREW, 6–32 X 3/8 BHMS, SS
76	46–208939P16	2	SCREW	2	SCREW,CAP 5/16–18 X 5/8 HEX HD BRASS

PEN PANEL w/o MULTICOIL 46–301383G18 FRU N

(PART 2 OF M3842PA PAGE 1–57)
(PART 2 OF M3852PA PAGE 1–58)
(PART 2 OF M3862PA PAGE 1–59)

Item	Part Number	FRU	Name	Quantity	Description (Remarks)
2	2133755–2	N	PANEL	1	UPPER PENETRATION PANEL, ALUMINUM
3	2133756	2	I/F WALL	1	LOWER PENETRATION PANEL SECTION
6	46–301385G4	N	FILTER ASM	1	SHIELD COOLER/BLOWER FILTER PANEL **(SEE PAGE 4–16)**
7	2121610	N	PLATE ASM	1	INSERT PLATE W/WAVE GUIDES **(SEE PAGE 4–17)**
8	46–301177P1	2	ADAPTER	2	HELIUM LINE FEED THROUGH GUIDE
9	46–282629G1	2	COVER ASM.	1	MAGNET RAMP PORT, PP1 A6
10	46–282638G1	2	COVER ASM.	1	BLANK RESISTIVE SHIM COVER PLATE
20	46–208937P6	N	NUT	23	#10–32 NUT LOCK, NYLOCK SST
24	46–221865P1	N	CONNECTOR	1	UG–30, N BULKHEAD, 50–OHM, JACK–JACK
25	46–208990P1	N	CONNECTOR	8	50 OHM BNC BULKHEAD ADAP'R JACK–JACK
27	46–208937P5	N	NUT	24	#8–32 LOCK NUT, NYLOCK SST
33	46–301353G2	N	PANEL ASM	1	1000V DYNAMIC DISABLE FILTER PANEL **(SEE PAGE 4–19)**
41	46–307572G3	N	PANEL ASM	1	SUB–D CABLE FILTER PANEL, UFI SYSTEM **(SEE PAGE 4–23)**
42	46–328039G2	1	REPEATER ASM	1	PEN PANEL REPEATER BOARD ASSEMBLY **(SEE PAGE 4–15)**
44	46–243775G860	2	CABLE	1	PP1–J89 TO PP1–A17–J2, 2–FT, 15–COND
46	46–221865P3	N	CONNECTOR	2	UG–27B RT–ANGLE N, 50–OHM JACK–PLUG
50	46–301216P1	2	PLATE	2	BLANK COVER PLATE FOR J60/61 HE LINE
56	46–320232G1	1	GRAD FILTER	1	GRADIENT FILTER ASM **(SEE PAGE 4–24)**
57	2236923	N	BRACKET	1	EXAM SIDE BRACKET
58	2236924	N	BRACKET	1	EQUIP SIDE BRACKET
59	2113244–2	N	U–BOLT	6	1.25" INSIDE DIA. 3/8–16 THD. 303SST
60	46–208935P10	N	NUT	16	3/8–16 .625 HEX X .250 THK BRASS
70	46–208560P82	N	SCREW	136	SCREW, 10–32 X 3/8 BHMS, SS
71	46–208932P3	N	SCREW	8	SCREW, CAP 5/16–18 X 3/4 HEX HD SS
72	46–208935P9	N	NUT	10	5/16–18, .563 HEX X .219 THK, BRASS
73	46–208560P102	N	SCREW	16	SCREW, 10–32 X 5/8 BHMS, SS
74	1000904P425	N	WASHER	7	0.2 ID, 0.5 OD, 04 THK, B11H89C
75	46–208560P110	N	SCREW	36	SCREW, 6–32 X 3/8 BHMS, SS
76	46–208939P16	N	SCREW	4	SCREW,CAP 5/16–18 X 5/8 HEX HD BRASS

PENETRATION PANEL WITH MULTICOIL **46–301383G13 & G19**

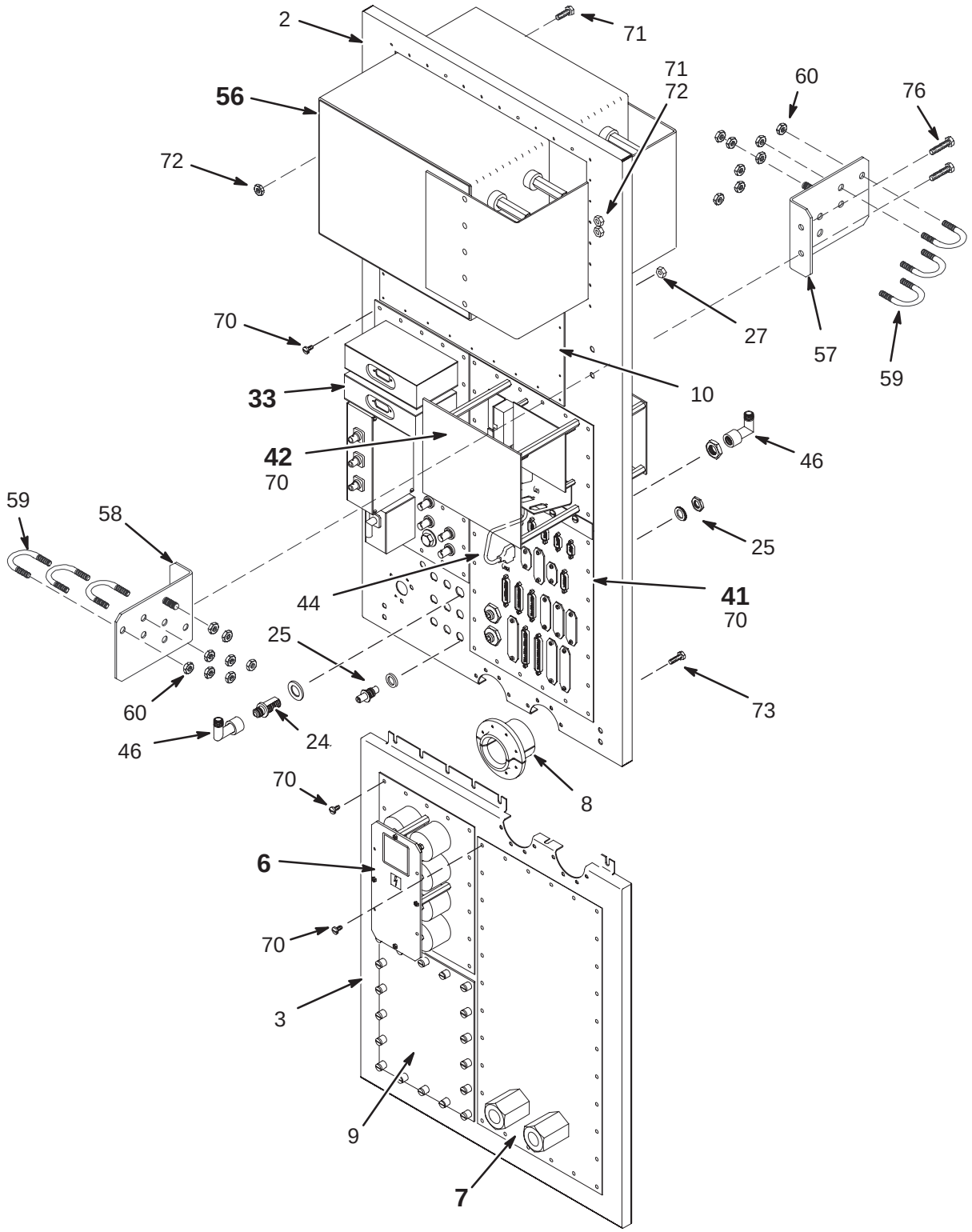

PEN PANEL with MULTICOIL 46–301383G13 FRU N (PART OF M1001PM, M1021PM, M1031PM)
(PART OF M1001PN, M1021PN M1031PN0
(PART OF M1801PM, M1811PM, M1821PM)
(PART OF M1801PN, M1811PN M1821PN)

Item	Part Number	FRU	Name	Quantity	Description (Remarks)
2	2133755–2	N	PANEL	1	UPPER PENETRATION PANEL, ALUMINUM
3	2133756	2	I/F WALL	1	LOWER PENETRATION PANEL SECTION
6	46–301385G4	N	FILTER ASM	1	SHIELD COOLER/BLOWER FILTER PANEL **(SEE PAGE 4–16)**
7	2121610	N	PLATE ASM	1	INSERT PLATE W/WAVE GUIDES **(SEE PAGE 4–17)**
8	46–301177P1	2	ADAPTER	2	HELIUM LINE FEED THROUGH GUIDE
9	46–282629G1	2	COVER ASM.	1	MAGNET RAMP PORT, PP1 A6
10	46–282638G1	2	COVER ASM.	1	BLANK RESISTIVE SHIM COVER PLATE
20	46–208937P6	2	NUT	23	#10–32 NUT LOCK, NYLOCK SST
24	46–221865P1	2	CONNECTOR	1	UG–30, N BULKHEAD, 50–OHM, JACK–JACK
25	46–208990P1	2	CONNECTOR	8	50 OHM BNC BULKHEAD ADAP'R JACK–JACK
27	46–208937P5	2	NUT	24	#8–32 LOCK NUT, NYLOCK SST
33	2133922	N	FILTER PANEL	1	ADAPTER PLATE ASM. FOR MULTICOIL **(SEE PAGE 4–20)**
41	46–307572G3	N	PANEL ASM	1	SUB–D CABLE FILTER PANEL, UFI SYSTEM **(SEE PAGE 4–23)**
42	46–328039G1	2	REPEATER ASM	1	REPEATER PANEL, PP1 A17 **(SEE PAGE 4–15)**
44	46–243775G860	2	CABLE	1	PP1–J89 TO PP1–A17–J2, 2–FT, 15–COND
46	46–221865P3	2	CONNECTOR	2	UG–27B RT–ANGLE N, 50–OHM JACK–PLUG
50	46–301216P1	2	PLATE	2	BLANK COVER PLATE FOR J60/61 HE LINE
56	46–320232G1	1	GRAD FILTER	1	GRADIENT FILTER ASM **(SEE PAGE 4–24)**
57	2236923	2	BRACKET	1	EXAM SIDE BRACKET
58	2236924	2	BRACKET	1	EQUIP SIDE BRACKET
59	2113244–2	2	U–BOLT	6	1.25" INSIDE DIA. 3/8–16 THD. 303SST
60	46–208935P10	2	NUT	16	3/8–16 .625 HEX X .250 THK BRASS
70	46–208560P82	2	SCREW	136	SCREW, 10–32 X 3/8 BHMS, SS
71	46–208932P3	2	SCREW	8	SCREW, CAP 5/16–18 X 3/4 HEX HD SS
72	46–208935P9	2	NUT	10	5/16–18, .563 HEX X .219 THK, BRASS
73	46–208560P102	2	SCREW	16	SCREW, 10–32 X 5/8 BHMS, SS
74	1000904P425	2	WASHER	7	0.2 ID, 0.5 OD, 04 THK, B11H89C
75	46–208560P110	2	SCREW	36	SCREW, 6–32 X 3/8 BHMS, SS
76	46–208939P16	2	SCREW	4	SCREW,CAP 5/16–18 X 5/8 HEX HD BRASS

PEN PANEL with MULTICOIL **46–301383G19 FRU N**

(PART 2 OF M3043PA PAGE 1–52)
(PART 2 OF M3044PA PAGE 1–52)
(PART 2 OF M3063PA PAGE 1–53)
(PART 2 OF M3053PA PAGE 1–53)
(PART 2 OF M3073PA PAGE 1–54)
(PART 2 OF M3083PA PAGE 1–54)
(PART 2 OF M3093PA PAGE 1–55)
(PART 2 OF M3843PA PAGE 1–57)
(PART 2 OF M3853PA PAGE 1–58)
(PART 2 OF M3863PA PAGE 1–59)
(PART 2 OF M3043TA PAGE 1–74)
(PART 2 OF M3053TA PAGE 1–74)
(PART 2 OF M3063TA PAGE 1–75)

Item	Part Number	FRU	Name	Quantity	Description (Remarks)
2	2133755–2	N	PANEL	1	UPPER PENETRATION PANEL, ALUMINUM
3	2133756	2	I/F WALL	1	LOWER PENETRATION PANEL SECTION
6	46–301385G4	N	FILTER ASM	1	SHIELD COOLER/BLOWER FILTER PANEL **(SEE PAGE 4–16)**
7	2121610	N	PLATE ASM	1	INSERT PLATE W/WAVE GUIDES **(SEE PAGE 4–17)**
8	46–301177P1	2	ADAPTER	2	HELIUM LINE FEED THROUGH GUIDE
9	46–282629G1	2	COVER ASM.	1	MAGNET RAMP PORT, PP1 A6
10	46–282638G1	2	COVER ASM.	1	BLANK RESISTIVE SHIM COVER PLATE
20	46–208937P6	N	NUT	23	#10–32 NUT LOCK, NYLOCK SST
24	46–221865P1	N	CONNECTOR	1	UG–30, N BULKHEAD, 50–OHM, JACK–JACK
25	46–208990P1	N	CONNECTOR	8	50 OHM BNC BULKHEAD ADAP'R JACK–JACK
27	46–208937P5	N	NUT	24	#8–32 LOCK NUT, NYLOCK SST
33	2133922	N	FILTER PANEL	1	ADAPTER PLATE ASM. FOR MULTICOIL **(SEE PAGE 4–20)**
41	46–307572G3	N	PANEL ASM	1	SUB–D CABLE FILTER PANEL, UFI SYSTEM **(SEE PAGE 4–23)**
42	46–328039G2	1	REPEATER ASM	1	PEN PANEL REPEATER BOARD ASSEMBLY **(SEE PAGE 4–15)**
44	46–243775G860	2	CABLE	1	PP1–J89 TO PP1–A17–J2, 2–FT, 15–COND
46	46–221865P3	N	CONNECTOR	2	UG–27B RT–ANGLE N, 50–OHM JACK–PLUG
50	46–301216P1	2	PLATE	2	BLANK COVER PLATE FOR J60/61 HE LINE
56	46–320232G1	1	GRAD FILTER	1	GRADIENT FILTER ASM **(SEE PAGE 4–24)**
57	2236923	N	BRACKET	1	EXAM SIDE BRACKET
58	2236924	N	BRACKET	1	EQUIP SIDE BRACKET
59	2113244–2	N	U–BOLT	6	1.25" INSIDE DIA. 3/8–16 THD. 303SST
60	46–208935P10	N	NUT	16	3/8–16 .625 HEX X .250 THK BRASS
70	46–208560P82	N	SCREW	136	SCREW, 10–32 X 3/8 BHMS, SS
71	46–208932P3	N	SCREW	8	SCREW, CAP 5/16–18 X 3/4 HEX HD SS
72	46–208935P9	N	NUT	10	5/16–18, .563 HEX X .219 THK, BRASS
73	46–208560P102	N	SCREW	16	SCREW, 10–32 X 5/8 BHMS, SS
74	1000904P425	N	WASHER	7	0.2 ID, 0.5 OD, 04 THK, B11H89C
75	46–208560P110	N	SCREW	36	SCREW, 6–32 X 3/8 BHMS, SS
76	46–208939P16	N	SCREW	4	SCREW,CAP 5/16–18 X 5/8 HEX HD BRASS

TwinSpeed PENETRATION PANEL WITH MULTICOIL **46–301383G17**

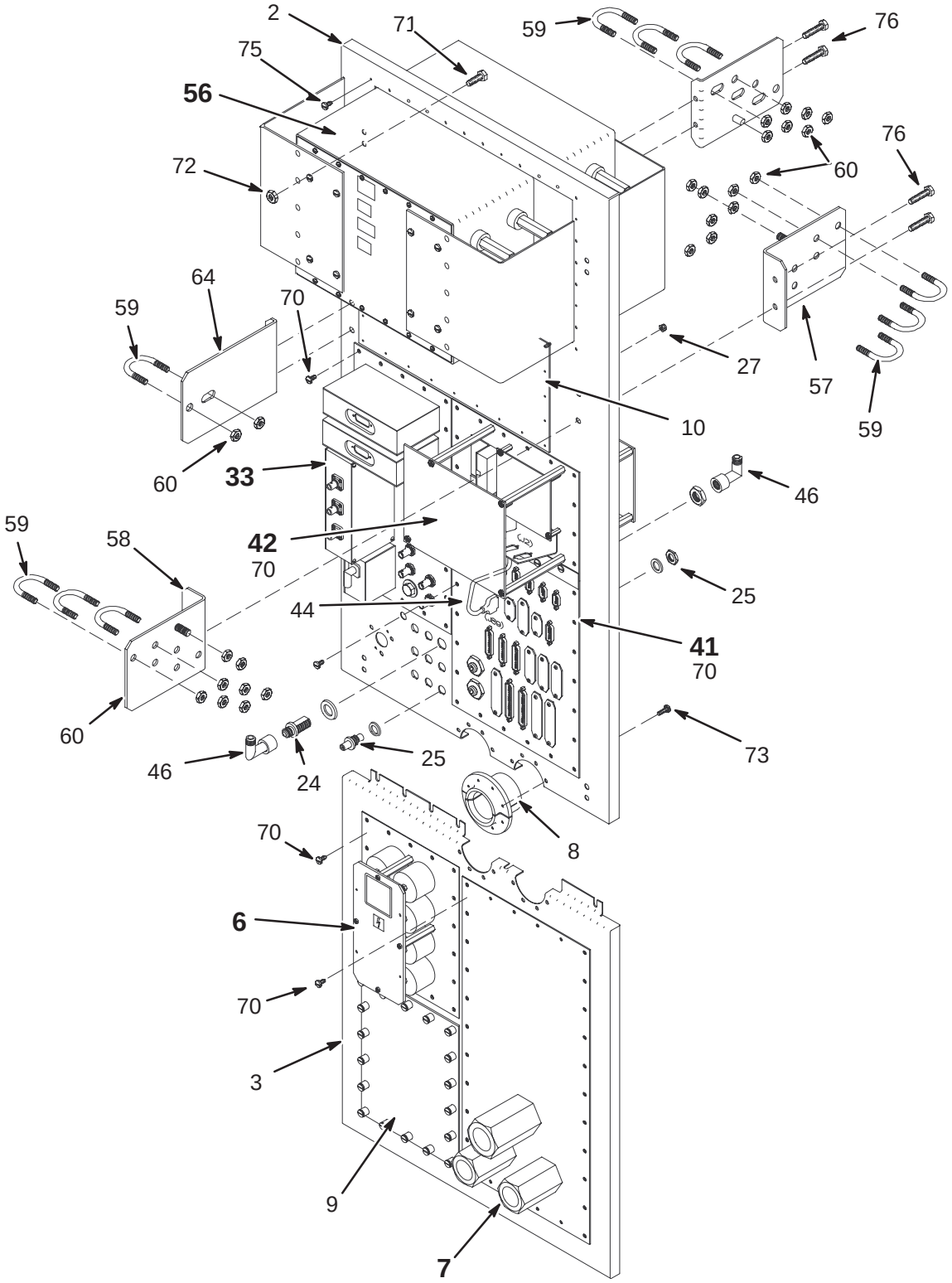

TwinSpeed PEN PANEL w/MC 46–301383G17 FRU N

(PART 2 OF M3043TA PAGE 1–74)
(PART 2 OF M3053TA PAGE 1–74)
(PART 2 OF M3063TA PAGE 1–75)

Item	Part Number	FRU	Name	Quantity	Description (Remarks)
2	2133755–2	N	PANEL	1	UPPER PENETRATION PANEL, ALUMINUM
3	2133756	N	I/F WALL	1	LOWER PENETRATION PANEL SECTION
6	46–301385G4	N	FILTER ASM	1	SHIELD COOLER/BLOWER FILTER PANEL **(SEE PAGE 4–16)**
7	2295629	N	PLATE ASM	1	TWIN PLATE ASSEMBLY **(SEE PAGE 4–18)**
8	46–301177P1	N	ADAPTER	2	HELIUM LINE FEED THROUGH GUIDE
9	46–282629G1	N	COVER ASM.	1	MAGNET RAMP PORT, PP1 A6
10	46–282638G1	N	COVER ASM.	1	BLANK RESISTIVE SHIM COVER PLATE
20	46–208937P6	N	NUT	23	#10–32 NUT LOCK, NYLOCK SST
24	46–221865P1	N	CONNECTOR	1	UG–30, N BULKHEAD, 50–OHM, JACK–JACK
25	46–208990P1	N	CONNECTOR	8	50 OHM BNC BULKHEAD ADAP'R JACK–JACK
27	46–208937P5	N	NUT	24	#8–32 LOCK NUT, NYLOCK SST
33	2133922	N	FILTER PANEL	1	ADAPTER PLATE ASM. FOR MULTICOIL **(SEE PAGE 4–20)**
41	46–307572G4	N	FILTER PANEL	1	TWINSPEED FILTER PANEL **(SEE PAGE 4–23)**
42	46–328039G2	2	REPEATER ASM	1	PEN PANEL REPEATER BOARD ASSEMBLY **(SEE PAGE 4–15)**
44	46–243775G860	N	CABLE	1	PP1–J89 TO PP1–A17–J2, 2–FT, 15–COND
46	46–221865P3	N	CONNECTOR	2	UG–27B RT–ANGLE N, 50–OHM JACK–PLUG
50	46–301216P1	N	PLATE	2	BLANK COVER PLATE FOR J60/61 HE LINE
56	2268040	1	FILTER	1	TWIN GRADIENT FILTER **(SEE PAGE 4–25)**
57	2236923	N	BRACKET	1	EXAM SIDE BRACKET
58	2236924	N	BRACKET	1	EQUIP SIDE BRACKET
59	2113244–2	N	U–BOLT	10	1.25" INSIDE DIA. 3/8–16 THD. 303SST
60	46–208935P10	N	NUT	26	3/8–16 .625 HEX X .250 THK BRASS
64	2295631	N	BRACKET	1	TWIN EQUIP SIDE BRACKET
65	2295630	N	BRACKET	1	TWIN MAG SIDE BRACKET
70	46–208560P82	N	SCREW	136	SCREW, 10–32 X 3/8 BHMS, SS
71	46–208932P3	N	SCREW	8	SCREW, CAP 5/16–18 X 3/4 HEX HD SS
72	46–208935P9	N	NUT	8	5/16–18, .563 HEX X .219 THK, BRASS
73	46–208560P102	N	SCREW	16	SCREW, 10–32 X 5/8 BHMS, SS
74	1000904P425	N	WASHER	7	0.2 ID, 0.5 OD, 04 THK, B11H89C
75	46–208560P110	N	SCREW	36	SCREW, 6–32 X 3/8 BHMS, SS
76	46–208939P16	N	SCREW	4	SCREW,CAP 5/16–18 X 5/8 HEX HD BRASS

EXCITE II PENETRATION PANEL WITH MULTICOIL 2377529

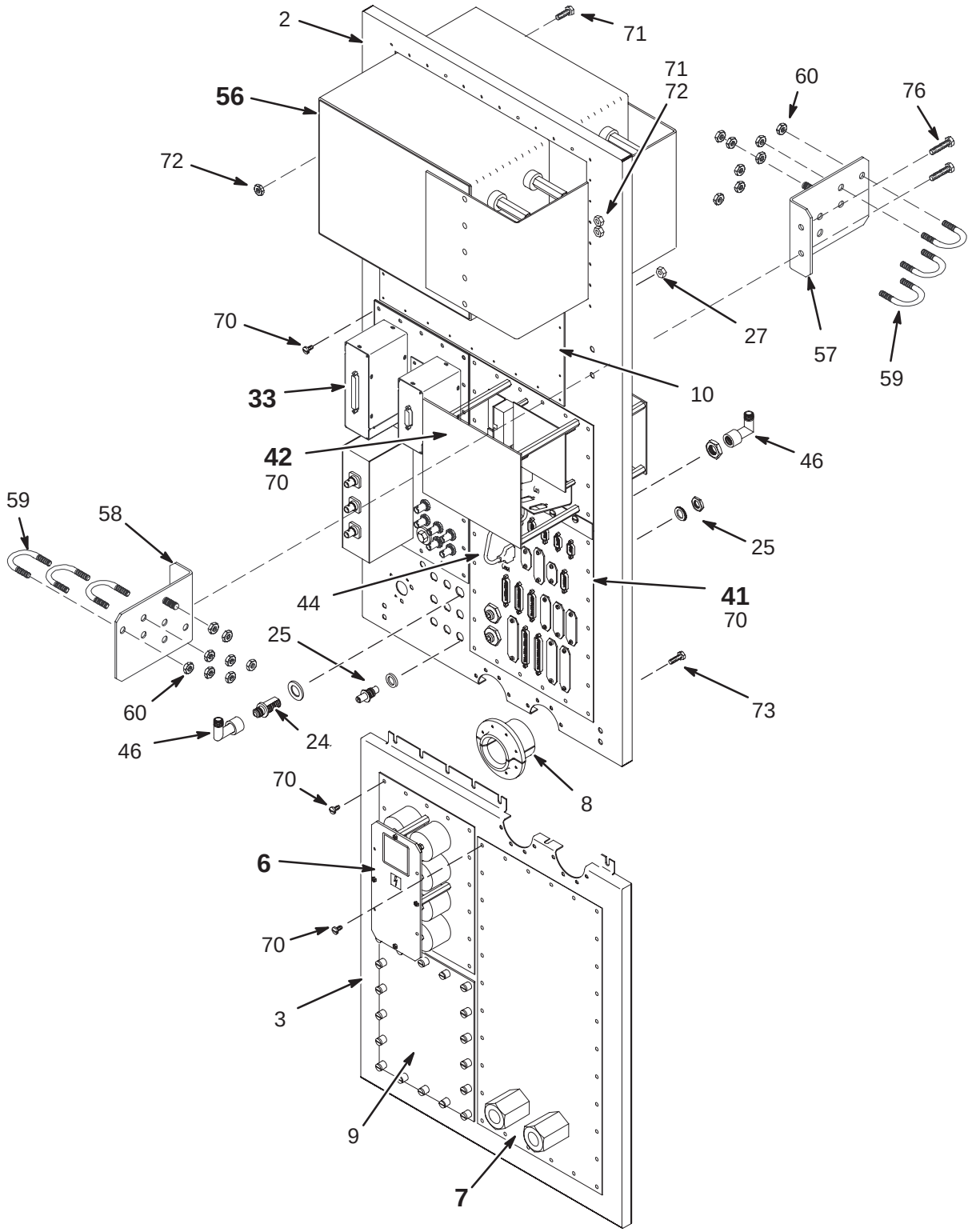

EXCITE II PENETRATION PANEL 2377529 FRU N

(PART 2 OF M3043PD PAGE 1–62)
(PART 2 OF M3053PD PAGE 1–62)
(PART 2 OF M3063PD PAGE 1–62)

Item	Part Number	FRU	Name	Quantity	Description (Remarks)
2	2133755–2	N	PANEL	1	UPPER PENETRATION PANEL, ALUMINUM
3	2133756	N	I/F WALL	1	LOWER PENETRATION PANEL SECTION
6	46–301385G4	N	FILTER ASM	1	SHIELD COOLER/BLOWER FILTER PANEL **(SEE PAGE 4–16)**
7	2121610	N	PLATE ASM	1	INSERT PLATE W/WAVE GUIDES **(SEE PAGE 4–17)**
8	46–301177P1	N	ADAPTER	2	HELIUM LINE FEED THROUGH GUIDE
9	46–282629G1	N	COVER ASM.	1	MAGNET RAMP PORT, PP1 A6
10	46–282638G1	N	COVER ASM.	1	BLANK RESISTIVE SHIM COVER PLATE
20	46–208937P6	N	NUT	23	#10–32 NUT LOCK, NYLOCK SST
24	46–221865P1	N	CONNECTOR	1	UG–30, N BULKHEAD, 50–OHM, JACK–JACK
25	46–208990P1	N	CONNECTOR	8	50 OHM BNC BULKHEAD ADAP'R JACK–JACK
27	46–208937P5	N	NUT	24	#8–32 LOCK NUT, NYLOCK SST
33	2317066	N	PLATE ASM	1	EXCITE ADAPTER PLATE ASSEMBLY (USSS **4–21)**
33	2377417	N	PLATE ASM	1	EXCITE II ADAPTER PLATE ASM) **(SEE PAGE 4–21)**
41	46–307572G4	N	FILTER PANEL	1	TWINSPEED FILTER PANEL **(SEE PAGE 4–23)**
42	46–328039G2	1	REPEATER ASM	1	PEN PANEL REPEATER BOARD ASSEMBLY **(SEE PAGE 4–15)**
44	46–243775G860	N	CABLE	1	PP1–J89 TO PP1–A17–J2, 2–FT, 15–COND
46	46–221865P3	N	CONNECTOR	2	UG–27B RT–ANGLE N, 50–OHM JACK–PLUG
50	46–301216P1	N	PLATE	2	BLANK COVER PLATE FOR J60/61 HE LINE
56	46–320232G1	1	GRAD FILTER	1	GRADIENT FILTER ASM **(SEE PAGE 4–24)**
57	2236923	N	BRACKET	1	EXAM SIDE BRACKET
58	2236924	N	BRACKET	1	EQUIP SIDE BRACKET
59	2113244–2	N	U–BOLT	6	1.25" INSIDE DIA. 3/8–16 THD. 303SST
60	46–208935P10	N	NUT	16	3/8–16 .625 HEX X .250 THK BRASS
70	46–208560P82	N	SCREW	136	SCREW, 10–32 X 3/8 BHMS, SS
71	46–208932P3	N	SCREW	8	SCREW, CAP 5/16–18 X 3/4 HEX HD SS
72	46–208935P9	N	NUT	8	5/16–18, .563 HEX X .219 THK, BRASS
73	46–208560P102	N	SCREW	16	SCREW, 10–32 X 5/8 BHMS, SS
74	1000904P425	N	WASHER	7	0.2 ID, 0.5 OD, 04 THK, B11H89C
75	46–208560P110	N	SCREW	36	SCREW, 6–32 X 3/8 BHMS, SS
76	46–208939P16	N	SCREW	2	SCREW,CAP 5/16–18 X 5/8 HEX HD BRASS

EXCITE II TwinSpeed PENETRATION PANEL WITH MULTICOIL **5322759–2**

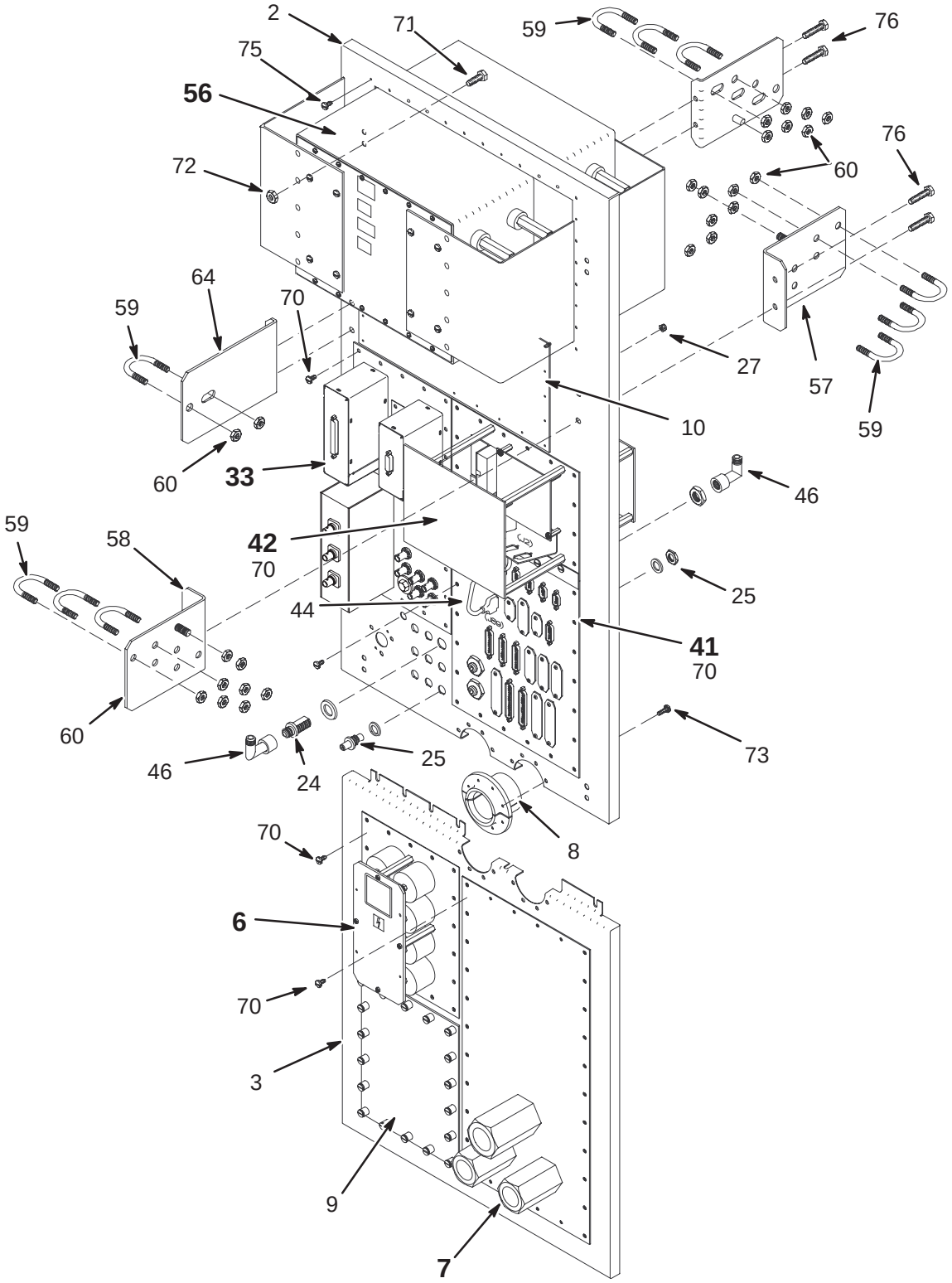

EXCITE II TwinSpeed PEN PANEL 2377529–2 FRU N

(PART 2 OF M3043TD PAGE 1–78)
(PART 2 OF M3053TD PAGE 1–78)
(PART 2 OF M3063TD PAGE 1–78)

Item	Part Number	FRU	Name	Quantity	Description (Remarks)
2	2133755–2	N	PANEL	1	UPPER PENETRATION PANEL, ALUMINUM
3	2133756	N	I/F WALL	1	LOWER PENETRATION PANEL SECTION
6	46–301385G4	N	FILTER ASM	1	SHIELD COOLER/BLOWER FILTER PANEL **(SEE PAGE 4–16)**
7	2295629	N	PLATE ASM	1	TWIN PLATE ASSEMBLY **(SEE PAGE 4–18)**
8	46–301177P1	N	ADAPTER	2	HELIUM LINE FEED THROUGH GUIDE
9	46–282629G1	N	COVER ASM.	1	MAGNET RAMP PORT, PP1 A6
10	46–282638G1	N	COVER ASM.	1	BLANK RESISTIVE SHIM COVER PLATE
20	46–208937P6	N	NUT	23	#10–32 NUT LOCK, NYLOCK SST
24	46–221865P1	N	CONNECTOR	1	UG–30, N BULKHEAD, 50–OHM, JACK–JACK
25	46–208990P1	N	CONNECTOR	8	50 OHM BNC BULKHEAD ADAP'R JACK–JACK
27	46–208937P5	N	NUT	24	#8–32 LOCK NUT, NYLOCK SST
33	2377417	N	PLATE ASM	1	EXCITE II ADAPTER PLATE ASM) **(SEE PAGE 4–21)**
41	46–307572G4	N	FILTER PANEL	1	TWINSPEED FILTER PANEL **(SEE PAGE 4–23)**
42	46–328039G2	2	REPEATER ASM	1	PEN PANEL REPEATER BOARD ASSEMBLY **(SEE PAGE 4–15)**
44	46–243775G860	N	CABLE	1	PP1–J89 TO PP1–A17–J2, 2–FT, 15–COND
46	46–221865P3	N	CONNECTOR	2	UG–27B RT–ANGLE N, 50–OHM JACK–PLUG
50	46–301216P1	N	PLATE	2	BLANK COVER PLATE FOR J60/61 HE LINE
56	2268040	1	FILTER	1	TWIN GRADIENT FILTER **(SEE PAGE 4–25)**
57	2236923	N	BRACKET	1	EXAM SIDE BRACKET
58	2236924	N	BRACKET	1	EQUIP SIDE BRACKET
59	2113244–2	N	U–BOLT	10	1.25" INSIDE DIA. 3/8–16 THD. 303SST
60	46–208935P10	N	NUT	26	3/8–16 .625 HEX X .250 THK BRASS
64	2295631	N	BRACKET	1	TWIN EQUIP SIDE BRACKET
65	2295630	N	BRACKET	1	TWIN MAG SIDE BRACKET
70	46–208560P82	N	SCREW	136	SCREW, 10–32 X 3/8 BHMS, SS
71	46–208932P3	N	SCREW	8	SCREW, CAP 5/16–18 X 3/4 HEX HD SS
72	46–208935P9	N	NUT	8	5/16–18, .563 HEX X .219 THK, BRASS
73	46–208560P102	N	SCREW	16	SCREW, 10–32 X 5/8 BHMS, SS
74	1000904P425	N	WASHER	7	0.2 ID, 0.5 OD, 04 THK, B11H89C
75	46–208560P110	N	SCREW	36	SCREW, 6–32 X 3/8 BHMS, SS

REPEATER PANEL **46–328039G1 & G2** **PP1 A17**

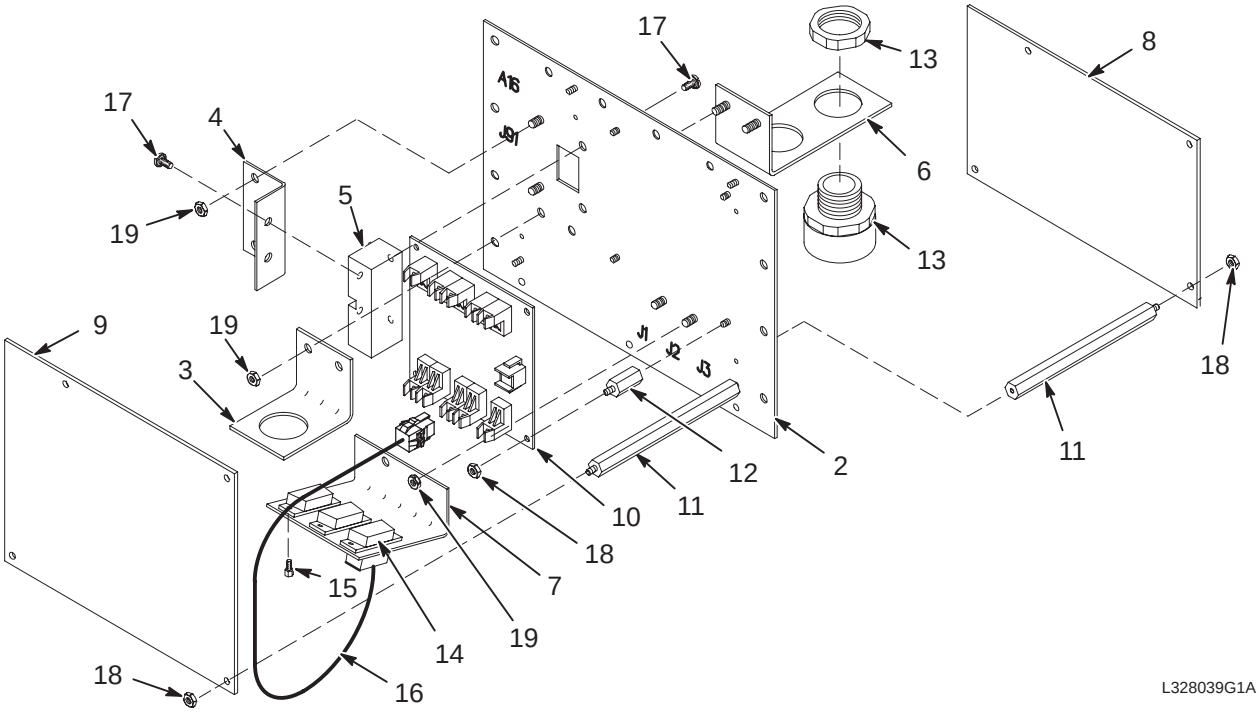

REPEATER PANEL 46–328039G1 FRU 2 (PART 42 OF 46–301383G12 PAGE 4–3)
(PART 42 OF 46–301383G13 PAGE 4–6)

Item	Part Number	FRU	Name	Quantity	Description (Remarks)
2	46–320541P1	2	PLATE	1	9.5 X 5.75, .064 ALUMINUM, IRIDITE
3	46–307211P1	2	BRACKET	1	SINGLE CONDUIT FIBER–OPTIC INTERFACE
4	46–320543P1	2	BRACKET	1	FIBER OPTIC CABLE FEED–THRU ACCESS
5	46–307212P1	2	BAR	1	J91 FIBEROPTIC CABLE FEED–THRU BLOCK
6	46–320544P1	2	BRACKET	1	TWO–CONDUIT FIBER–OPTIC INTERFACE
7	46–320829P1	2	BRACKET	1	REPEATER CABLE INTERFACE, J1, J2, J3
8	46–320542P1	2	PLATE	1	LEXAN SHIELD, 4.75 X 7.5, 0.1 THICK
9	46–320542P2	2	PLATE	1	LEXAN SHIELD, 6.25 X 7.5, 0.1 THICK
10	46–321220G1	1	CIRCUIT BD	1	FO REPEATER BOARD, PP1 A17 A1
11	46–328129P1	2	SPACER	8	3/8 HEX X 4.5 LG. 6–32 THREAD, BRASS
12	46–328129P2	2	SPACER	4	3/8 HEX X .75 LG. 6–32 THREAD, BRASS
13	46–307244P4	2	CONNECTOR	3	PANEL MOUNT FOR 3/4” F.O. CONDUIT
14	46–328106P1	2	CABLE	1	3.5” RIBBON CABLE, (3) 15–PIN SUB–D
15	46–221417P1	2	SCREWLOCK	3	FEMALE SCREWLOCKS, TWO PER KIT
16	46–328105G1	2	HARNESS	1	8” 2–WIRE F/O REPEATER POWER CABLE
17	46–208560P123	2	SCREW,MACH	4	010–32 X 0.375 LG BIND HD SST 18–8
18	46–208936P1	2	NUT,HEX,MS	12	00006–32 .250 HEX X .094 THK BR
19	46–208935P7	2	NUT,HEX,MS	6	00010–32 .375 HEX X .125 THK BR

REPEATER PANEL 46–328039G2 FRU 1 (PART 42 OF 46–301383G17 PAGE 4–9)
(PART 42 OF 46–301383G18 PAGE 4–4)
(PART 42 OF 46–301383G19 PAGE 4–7)
(PART 42 OF 23775292 PAGE 4–11)
(PART 42 OF 2377529–2 PAGE 4–13)

Item	Part Number	FRU	Name	Quantity	Description (Remarks)
2	46–320541P1	N	PLATE	1	9.5 X 5.75, .064 ALUMINUM, IRIDITE
3	46–307211P1	N	BRACKET	1	SINGLE CONDUIT FIBER–OPTIC INTERFACE
4	46–320543P1	N	BRACKET	1	FIBER OPTIC CABLE FEED–THRU ACCESS
5	46–307212P1	N	BAR	1	J91 FIBEROPTIC CABLE FEED–THRU BLOCK
6	46–320544P1	N	BRACKET	1	TWO–CONDUIT FIBER–OPTIC INTERFACE
7	46–320829P1	N	BRACKET	1	REPEATER CABLE INTERFACE, J1, J2, J3
8	46–320542P1	N	PLATE	1	LEXAN SHIELD, 4.75 X 7.5, 0.1 THICK
9	46–320542P2	N	PLATE	1	LEXAN SHIELD, 6.25 X 7.5, 0.1 THICK
10	46–321220G1	1	CIRCUIT BD	1	FO REPEATER BOARD, PP1 A17 A1
11	46–328129P1	N	SPACER	8	3/8 HEX X 4.5 LG. 6–32 THREAD, BRASS
12	46–328129P2	N	SPACER	4	3/8 HEX X .75 LG. 6–32 THREAD, BRASS
13	46–307244P4	N	CONNECTOR	3	PANEL MOUNT FOR 3/4” F.O. CONDUIT
14	46–328106P1	N	CABLE	1	3.5” RIBBON CABLE, (3) 15–PIN SUB–D
15	46–221417P1	N	CONNECTOR	3	FEMALE SCREWLOCKS, TWO PER KIT
16	46–328105G1	N	HARNESS	1	8” 2–WIRE F/O REPEATER POWER CABLE
17	46–208560P123	N	SCREW	4	10–32 X 0.375 LG BIND HD SST 18–8 SCREW
18	46–208936P1	N	NUT	12	6–32, 1/4” HEX X .094 THICK, BRASS
19	46–208935P7	N	NUT	6	10–32, 3/8 HEX, 1/8” THICK, BRASS
200	2266300–65	N	COLLECTOR	1	MAQUILA LABOR–46–328039G2 REPEATER

SHIELD COOLER/BLOWER FILTER PANEL

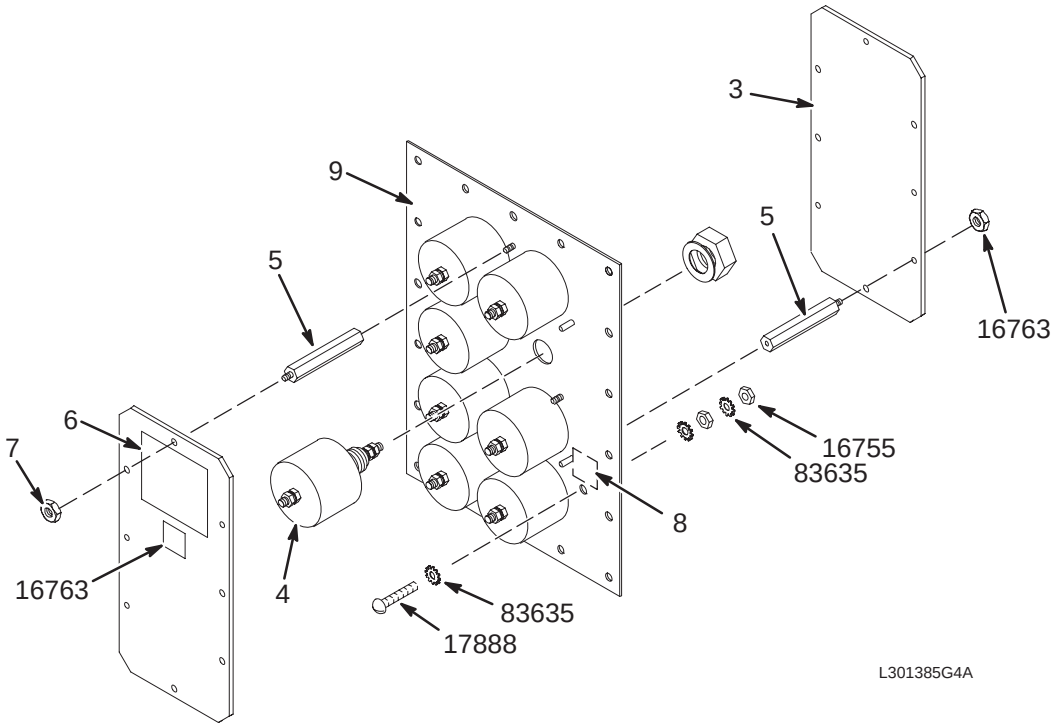

FILTER PANEL **46–301385G4 FRU N**

(PART 6 OF 46–301383G12 PAGE 4–3)
(PART 6 OF 46–301383G13 PAGE 4–6)
(PART 6 OF 46–301383G17 PAGE 4–9)
(PART 6 OF 46–301383G18 PAGE 4–4)
(PART 6 OF 46–301383G19 PAGE 4–7)
(PART 6 OF 2377529 PAGE 4–11)
(PART 6 OF 2377529–2 PAGE 4–13)

Item	Part Number	FRU	Name	Quantity	Description (Remarks)
2	2121531	2	PLATE	1	EMPTY 8–FILTER PLATE, F1 THROUGH F8
3	2121529	2	COVER PLATE	2	EIGHT EMI FILTER SAFETY COVER PLATE
4	46–282750P1	1	FILTER	8	250VAC/1000VDC EMI NOISE FILTER.
5	46–282751P1	2	STANDOFF	8	3/8” HEX X 2.25” SPACER, 6–32 THREAD
6	46–211345P1	2	LABEL	2	”WARNING HIGH VOLTAGE” .003 THK ALUM
7	46–271110P3	2	LABEL	2	DANGEROUS VOLTAGE GRAPHIC SYMBOL
8	46–271110P1	2	LABEL	2	PROTECTIVE EARTH (GROUND)
16755	46–208935P8	2	NUT,HEX,MS	4	1/4–20, 7/16” HEX X 3/16 THK, BRASS
16763	46–208936P1	2	NUT,HEX,MS	8	6–32, 1/4” HEX X .094 THICK, BRASS
17888	46–220184P54	2	SCREW MACH	2	1/4–20 X 1” LG, RND HD SLOT, BRASS
83635	46–208599P19	2	WASHER,LOCK	6	1/4 EXTERNAL TOOTH PHOS, BRONZE

INSERT PLATE WITH WAVE GUIDES 2121610

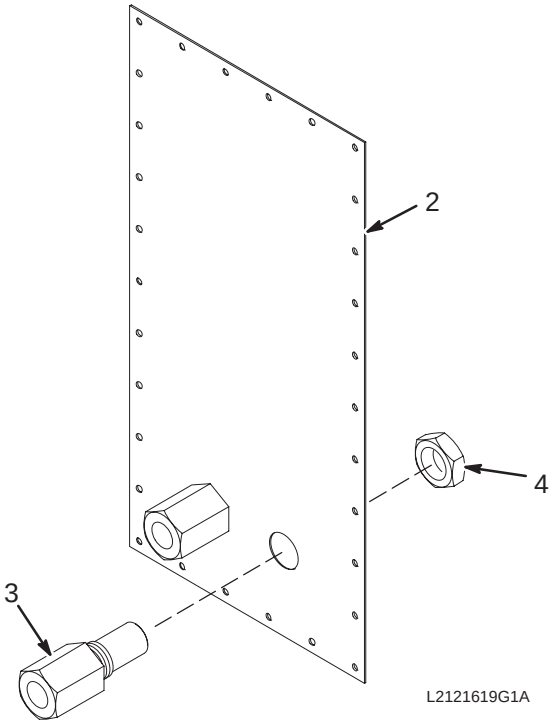

INSERT PLATE w/WAVE GUIDES 2121610 FRU N

(PART 7 OF 46–301383G12 PAGE 4–3)
(PART 7 OF 46–301383G13 PAGE 4–6)
(PART 7 OF 46–301383G18 PAGE 4–4)
(PART 7 OF 46–301383G19 PAGE 4–7)
(PART 7 OF 2377529 PAGE 4–11)

Item	Part Number	FRU	Name	Quantity	Description (Remarks)
2	2121530	2	PLATE	1	LOWER PANEL INSERT PLATE
3	2113242	2	WAVE GUIDE	2	1.5” HEX, 1–1/8–12 THD, 4” LONG ALUM
4	2113241	2	NUT	2	1–1/8–12 THD, 1.5” HEX NUT, ALUMINUM

TwinSpeed INSERT PLATE WITH WAVE GUIDES 2295629

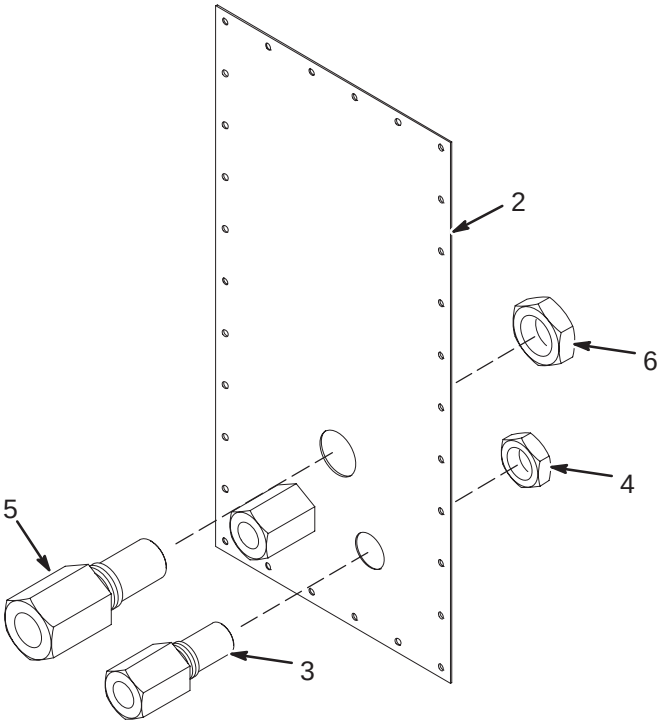

TwinSpeed PLATE w/WAVE GUIDES 2295629 FRU N (PART 7 OF 46–301383G17 PAGE 4–9)
(PART 7 OF 2377529–2 PAGE 4–13)

Item	Part Number	FRU	Name	Quantity	Description (Remarks)
2	2289692	N	PLATE	1	WAVEGUIDE PLATE
3	2289691	N	GUIDE	2	COOLANT LINE WAVE GUIDE
4	2294094	N	NUT–INCH	2	NUT–INCH HEXAGON
5	2289689	N	GUIDE	1	VACUUM LINE WAVE GUIDE
6	2294095	N	NUT–INCH	1	NUT–INCH HEXAGON

1000V DYNAMIC DISABLE FILTER PANEL 46–301353G2

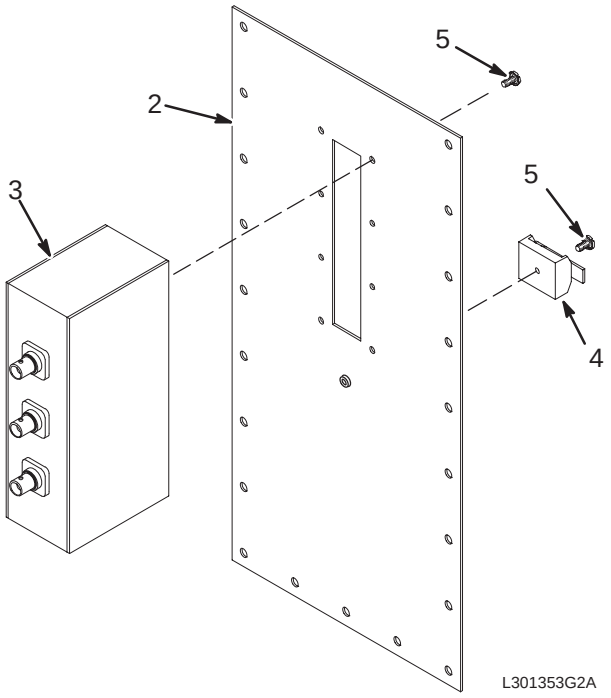

DYNAMIC DISABLE FILTER PANEL 46–301353G2 FRU N (PART 33 OF 46–301383G12 PAGE 4–3)
(PART 33 OF 46–301383G18 PAGE 4–4)

Item	Part Number	FRU	Name	Quantity	Description (Remarks)
2	46–301172P1	2	PLATE	1	BODY COIL FILTER MOUNTING PLATE
3	2111443	1	CIRCUIT BD	1	1KV DYNAMIC DISABLE FILTER MODULE
4	46–220191P1	2	CLAMP	1	CLAMP FOR FLAT CABLE
5	516A770P604	2	SCREW,MACH	9	6–32 X 1/4 LG BIND HEAD SST 18–8

ADAPTER PLATE ASM FOR MULTICOIL 2133922

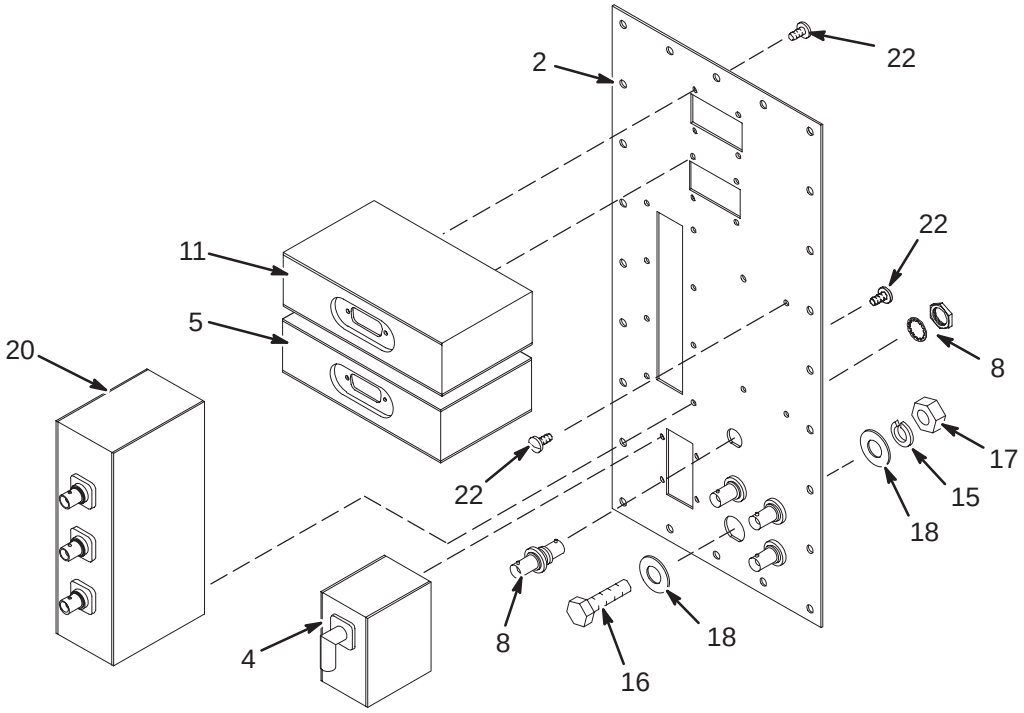

ADAPTER PLATE ASM FOR MULTICOIL 2133922 FRU N

(PART 33 OF 46–301383G13 PAGE 4–6)
(PART 33 OF 46–301383G17 PAGE 4–9)
(PART 33 OF 46–301383G19 PAGE 4–7)

Item	Part Number	FRU	Name	Quantity	Description (Remarks)
2	2133757	2	PLATE	1	EMPTY FILTER PLATE FOR MULTICOIL ETC
4	46–264992G1	1	CIRCUIT BD	1	MULTI–COIL RECEIVE SELECT SW. PP1A14
5	46–264994G1	1	CIRCUIT BD	1	MULTI–COIL SWITCHING FILTER, PP1–A15
8	46–208990P1	2	ADAPTER	4	50 OHM BNC BULKHEAD ADAP'R JACK–JACK
11	46–264994G2	1	CIRCUIT BD	1	MULTI–COIL BIAS FILTER, PP1–A16
15	46–220196P6	2	WASHER,LOCK	1	3/8" SCREW SIZE (0.375), 18–8 SST
16	46–208932P4	2	SCREW,CAP	1	3/8–16 X 1", HEX HEAD, 18–8 SST
17	46–208948P2	2	NUT,HEX	1	3/8–16 .563 HEX X .328 THK, 18–8 SST
18	1000904P447	2	WASHER,FLAT	2	25/64 ID, 1" OD, 1/16" THICK, B7A34C
20	2111443	1	CIRCUIT BD	1	1KV DYNAMIC DISABLE FILTER MODULE
22	46–208921P4	2	SCREW,MACH	2	6–32 X 1/4", BRASS

EXCITE II ADAPTER PLATE ASM 2377417

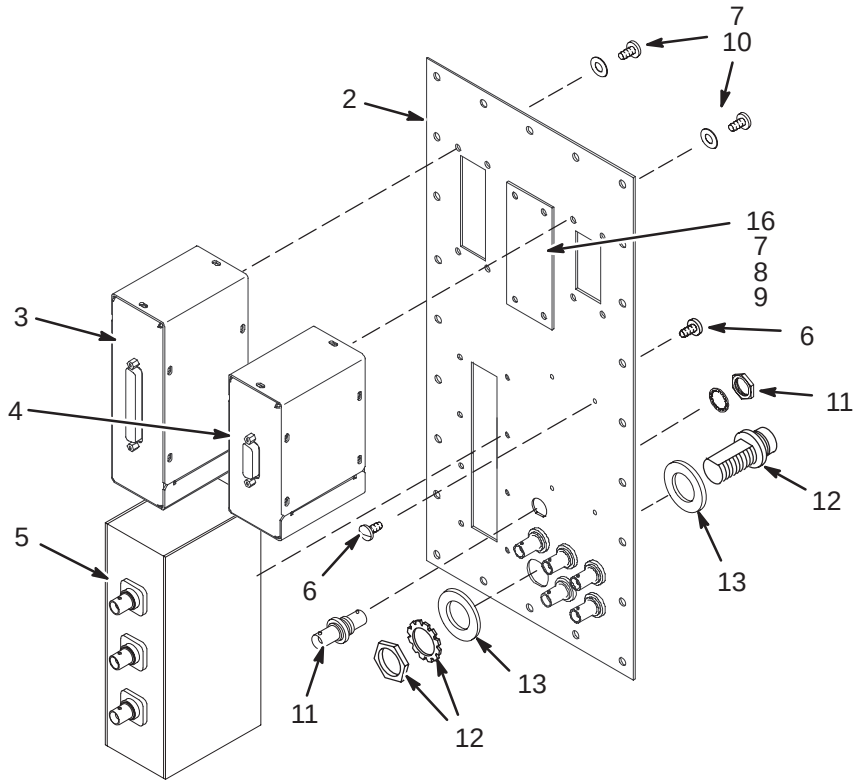

EXCITE II ADAPTER PLATE ASM 2377417 FRU N (PART 33 OF 2377529 PAGE 4–11)
(PART 33 OF 2377529–2 PAGE 4–13)

Item	Part Number	FRU	Name	Quantity	Description (Remarks)
2	2316657	N	PART	1	PLATE,PEN PANEL
3	2296094	1	FILTER ASM	1	MULTICOIL FILTER ASSEMBLY
4	2296298	1	FILTER ASSEM	1	MC PREAMP BIAS FILTER ASSEMBLY
5	2111443	N	CIRCUIT BD	1	1KV DYNAMIC DISABLE FILTER MODULE
6	46–208921P4	N	SCREW	12	SCREW
7	2109873–13	N	SCREW	12	SCREW PAN HEAD 4 MM 8 MM
8	2109877	N	NUT	4	NUT HEXAGON 4 MM
9	2109878–2	N	WASHER	4	WASHER PLAIN – NORMAL 4.3 MM 9 MM
10	2109880–2	N	WASHER	8	WASHER LOCK – SPRING 4.1 MM 7.6 MM
11	46–208990P1	N	CONNECTOR	6	50 OHM BNC BULKHEAD ADAP'R JACK–JACK
12	46–208932P4	N	SCREW	1	SCREW
13	1000904P447	N	WASHER	2	25/64 ID, 1" OD, 1/16" THICK, B7A34C
14	46–220196P6	N	WASHER	1	WASHER3/8"SCREW SIZE(0.375),18–8 SST
15	46–208948P2	N	NUT	1	3/8–16 .563 HEX X .328 THK, 18–8 SST
16	2325861	N	PART	1	COVER,PEN PANEL

CABLE FILTER PANEL **46–307572G3 & G4**

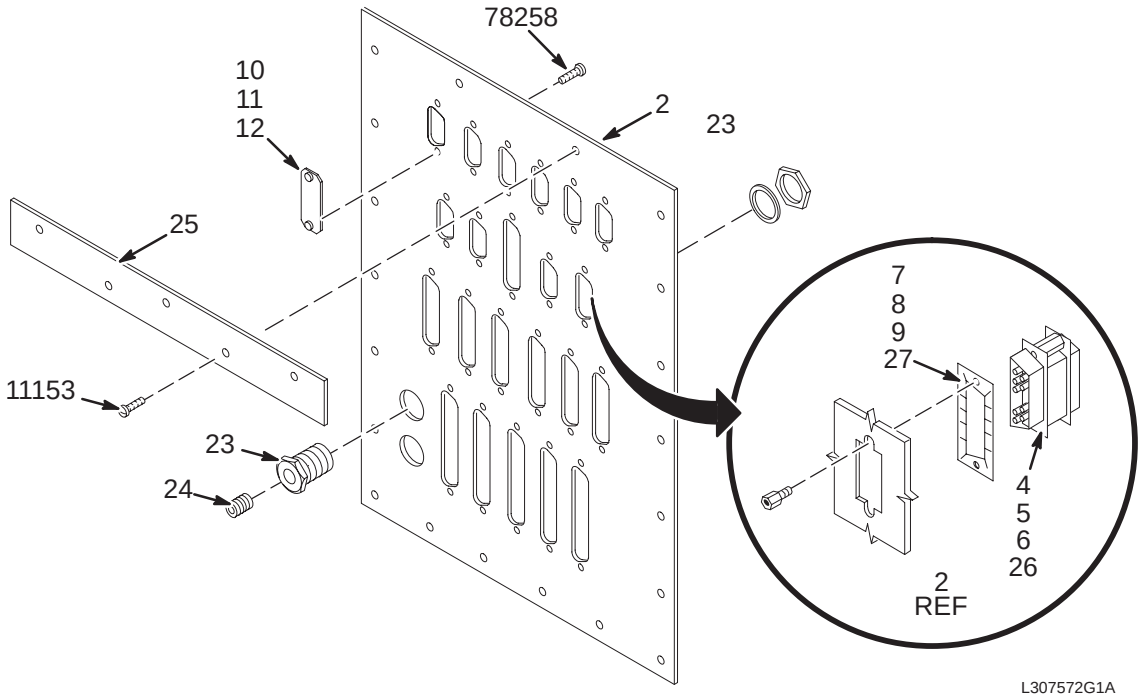

5.5 CABLE FILTER PANEL 46–307572G3 FRU N (PART 41 OF 46–301383G12 PAGE 4–3)
(PART 41 OF 46–301383G13 PAGE 4–6)
(PART 41 OF 46–301383G18 PAGE 4–4)
(PART 41 OF 46–301383G19 PAGE 4–7)

Item	Part Number	FRU	Name	Quantity	Description (Remarks)
2	46–307207P1	2	PLATE	1	SUB–D CABLE CONNECTION FILTER PLATE
4	2366642	1	CONNECTOR	6	CONNECTOR 9 CONTACTS 200 VOLTS 5 AMP
5	2366642–3	1	CONNECTOR	4	CONNECTOR 25CONTACTS 200 VOLTS 5 AMP
6	2366642–4	1	CONNECTOR	2	CONNECTOR 37CONTACTS 200 VOLTS 5 AMP
7	46–221754P1	2	CONNECTOR	6	RFI GASKET USED WITH 9 PIN SUB–D
8	46–221754P3	2	CONNECTOR	4	RFI GASKET USED WITH 25 PIN SUB–D
9	46–221754P4	2	CONNECTOR	2	RFI GASKET USED WITH 37 PIN SUB–D
10	46–301197P1	2	PLATE	3	9–PIN SUB–D PANEL OPENING COVER
11	46–301197P3	2	PLATE	3	25–PIN SUB–D PANEL OPENING COVER
12	46–301197P4	2	PLATE	3	37–PIN SUB–D PANEL OPENING COVER
23	46–307169P1	2	FITTING	2	1/4 NPT, PARKER #207ACBH–4 (BRASS)
24	46–136371P3	2	FITTING	2	BRASS 1/4 NPT HEX SOCKET
25	46–307213P1	2	BAR	1	PLATE JOINT SEALING STRIP, 9.5 X 1
26	2366642–2	1	CONNECTOR	1	CONNECTOR 15CONTACTS 200 VOLTS 5 AMP
27	46–221754P2	2	CONNECTOR	1	RFI GASKET USED WITH 15 PIN
28	46–208560P82	2	SCREW	2	10–32 X 3/8, BINDING HEAD, SST 18–8
29	46–208560P81	2	SCREW	18	4–40 X 1/4, BINDING HEAD, SST 18–8

TwinSpeed CABLE FILTER PANEL 46–307572G4 FRU N (PART 41 OF 46–301383G17 PAGE 4–9)
(PART 41 OF 2377529 PAGE 4–11)
(PART 41 OF 2377529–2 PAGE 4–13)

Item	Part Number	FRU	Name	Quantity	Description (Remarks)
2	46–307207P1	2	PLATE	1	SUB–D CABLE CONNECTION FILTER PLATE
4	2366642	1	CONNECTOR	6	CONNECTOR 9 CONTACTS 200 VOLTS 5 AMP
5	2366642–3	1	CONNECTOR	4	CONNECTOR 25CONTACTS 200 VOLTS 5 AMP
6	2366642–4	1	CONNECTOR	2	CONNECTOR 37CONTACTS 200 VOLTS 5 AMP
7	46–221754P1	2	CONNECTOR	7	RFI GASKET USED WITH 9 PIN SUB–D
8	46–221754P3	2	CONNECTOR	4	RFI GASKET USED WITH 25 PIN SUB–D
9	46–221754P4	2	CONNECTOR	2	RFI GASKET USED WITH 37 PIN SUB–D
10	46–301197P1	2	PLATE	2	9–PIN SUB–D PANEL OPENING COVER
11	46–301197P3	2	PLATE	3	25–PIN SUB–D PANEL OPENING COVER
12	46–301197P4	2	PLATE	3	37–PIN SUB–D PANEL OPENING COVER
23	46–307169P1	2	FITTING	2	1/4 NPT, PARKER #207ACBH–4 (BRASS)
24	46–136371P3	2	FITTING	2	BRASS 1/4 NPT HEX SOCKET
25	46–307213P1	2	BAR	1	PLATE JOINT SEALING STRIP, 9.5 X 1
26	2366642–2	1	CONNECTOR	1	CONNECTOR 15CONTACTS 200 VOLTS 5 AMP
27	46–221754P2	2	CONNECTOR	1	RFI GASKET USED WITH 15 PIN
28	46–208560P82	2	SCREW	2	SCREW, 10–32 X 3/8 BHMS, SS
29	46–208560P81	2	SCREW	16	SCREW

GRADIENT FILTER ASM

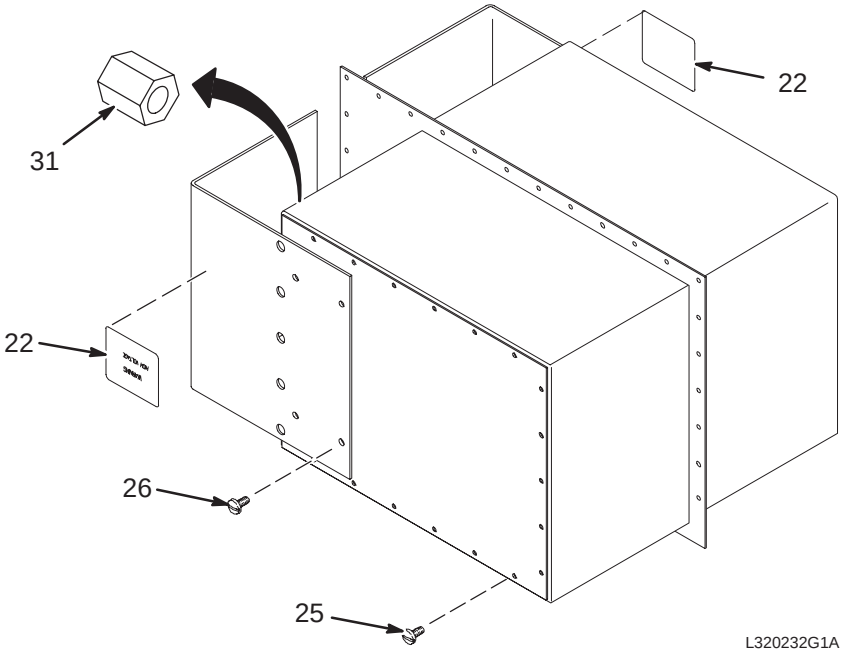

GRADIENT FILTER ASM **46–320232G1 FRU 1** **(PART 56 OF 46–301383G12 PAGE 4–3)**
(PART 56 OF 46–301383G13 PAGE 4–6)
(PART 56 OF 46–301383G18 PAGE 4–4)
(PART 56 OF 46–301383G19 PAGE 4–7)
(PART 56 OF 2377529 PAGE 4–11)

Item	Part Number	FRU	Name	Quantity	Description (Remarks)
22	46–211345P1	2	MECHANICAL/M	2	”WARNING HIGH VOLTAGE” .003 THK ALUM
25	46–170015P10	2	SCREW	44	6–32 X 1/4” LG BIND HD STL EXT TOOTH
26	46–208560P46	2	SCREW	8	10–32 X 1/4” BIND HEAD, STL F70B5A
31	46–320527P1	2	BRASS NUT	21	3/4” HEX 1/2–13 SPRIALOCK THREAD

TwinSpeed GRADIENT FILTER ASM

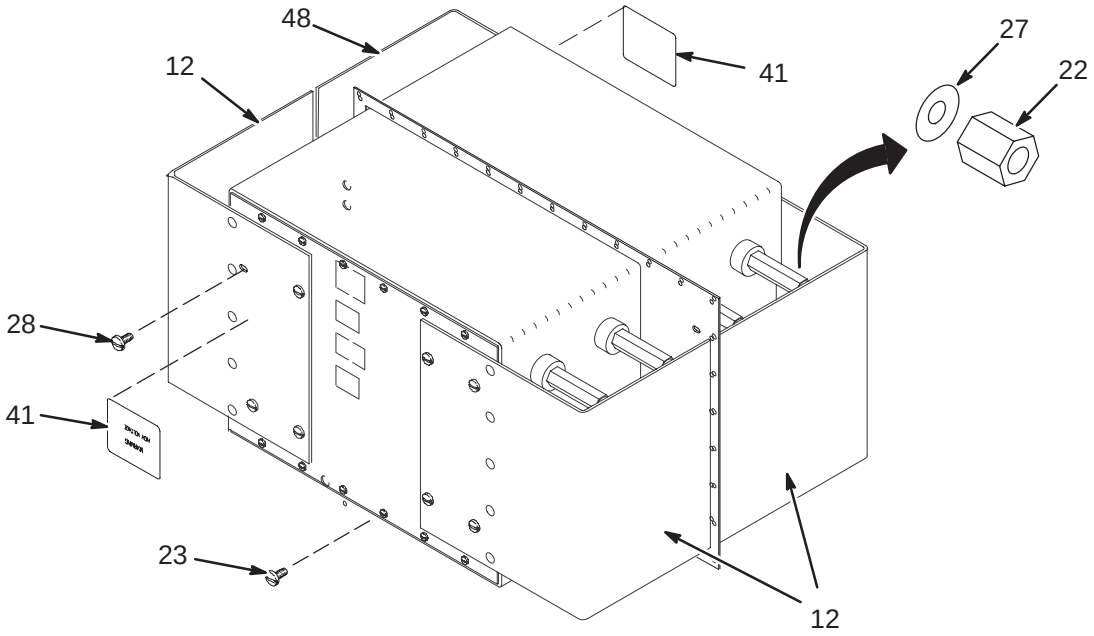

TwinSpeed GRADIENT FILTER ASM 2268040 FRU 1 (PART 56 OF 46–301383G17 PAGE 4–9)
(PART 56 OF 2377529–2 PAGE 4–13)

Item	Part Number	FRU	Name	Quantity	Description (Remarks)
12	2269157	N	PLASTIC COVE	3	TWIN GR FILTER PLASTIC COVER
22	46–320527P1	2	BRASS NUT	21	3/4” HEX 1/2–13 SPRIALOCK THREAD
23	2324359	N	SCREW	128	SCREW PAN HEAD W/SPR WASHER 6–32 3/8
27	46–252322P10	2	WASHER	21	WASHER, BRASS, .50 PLAIN
28	2271156	N	SCREW	16	SCREW PAN HEAD #10–24X3/8”
41	2297081	N	DANGER LABEL	6	HIGH VOLTAGE LABEL
48	2269157–2	N	PLASTIC COVE	1	TWIN GR FILTER PLASTIC COVER

4–2 PENETRATION PANEL COVERS

COVER KIT **46–317126G3 & G4**

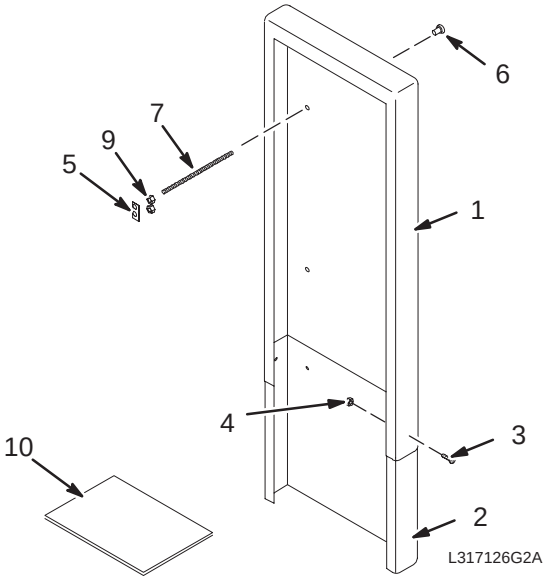

COVER KIT – FIXED **46–317126G3 FRU N** **(PART OF 46–282429 FIXED – SECTION 1)**
(PART 11 OF M3043PD PAGE 1–62)
(PART 11 OF M3043TD PAGE 1–78)

Item	Part Number	FRU	Name	Quantity	Description (Remarks)
1	46–306963P2	2	COVER,TOP	2	PEN. PANEL COVER, 28”W X 66”H X 7.5D
2	46–306964P2	2	COVER,BOTTOM	2	COVER EXTENSION 19H X 27.75W X 7.25D
3	46–208560P82	2	SCREW,MACH	8	10–32 X 3/8, BINDING HEAD, SST 18–8
4	46–208938P5	2	NUT,HEX,MS	8	10–32, 3/8” HEX X .130 THK, 18–8 SST
5	46–301211P1	2	PLATE	8	1.4”X .75” REINFORCING PLATE, ALUM
6	46–301212P1	2	NUT,BARREL	8	.81 DIA HEAD X 1”LG, 5/16–18 INT THD
7	46–301213P2	2	THREADED ROD	8	5/16–18 X 18”, BRASS
9	46–208935P9	2	NUT,HEX,MS	16	5/16–18, .563 HEX X .219 THK, BRASS
10	2128024	2	SHIELD	2	11 X 32” FLOOR COVER .063 ALUM PLATE

COVER KIT – MOBILE & T/R **46–317126G4 FRU N** **(PART OF 46–282429 MOBILE & T/R – SECTION 1)**
(PART 11 OF M3053PD PAGE 1–62)
(PART 11 OF M3063PD PAGE 1–62)
(PART 11 OF M3053TD PAGE 1–78)
(PART 11 OF M3063TD PAGE 1–78)

Item	Part Number	FRU	Name	Quantity	Description (Remarks)
1	46–306963P2	2	COVER,TOP	1	PEN. PANEL COVER, 28”W X 66”H X 7.5D
2	46–306964P2	2	COVER,BOTTOM	1	COVER EXTENSION 19H X 27.75W X 7.25D
3	46–208560P82	2	SCREW	4	SCREW
4	46–208938P5	2	NUT	4	10–32, 3/8” HEX X .130 THK, 18–8 SST
5	46–301211P1	2	PLATE	4	1.4”X .75” REINFORCING PLATE, ALUM
6	46–301212P1	2	NUT	4	.81 DIA HEAD X 1”LG, 5/16–18 INT THD
7	46–301213P2	2	SCREW	4	5/16–18 X 18”, BRASS
9	46–208935P9	2	NUT	8	5/16–18, .563 HEX X .219 THK, BRASS