SECTION 15 – ACGD/PDU CABINET

TABLE OF CONTENTS

SECTION **PAGE**

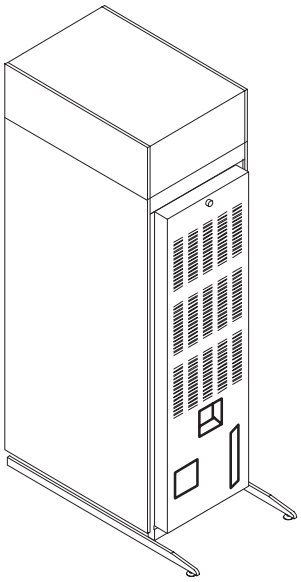

15–1 ACGD/PDU CABINET 15–2
Contains information on ACGD/PDU Cabinet

ACGD/PDU CABINET 2284300 15–2
ACGD/PDU CABINET 2238915 15–4

15–1 ACGD/PDU CABINET

ACGD/PDU CABINET ASM 2284300

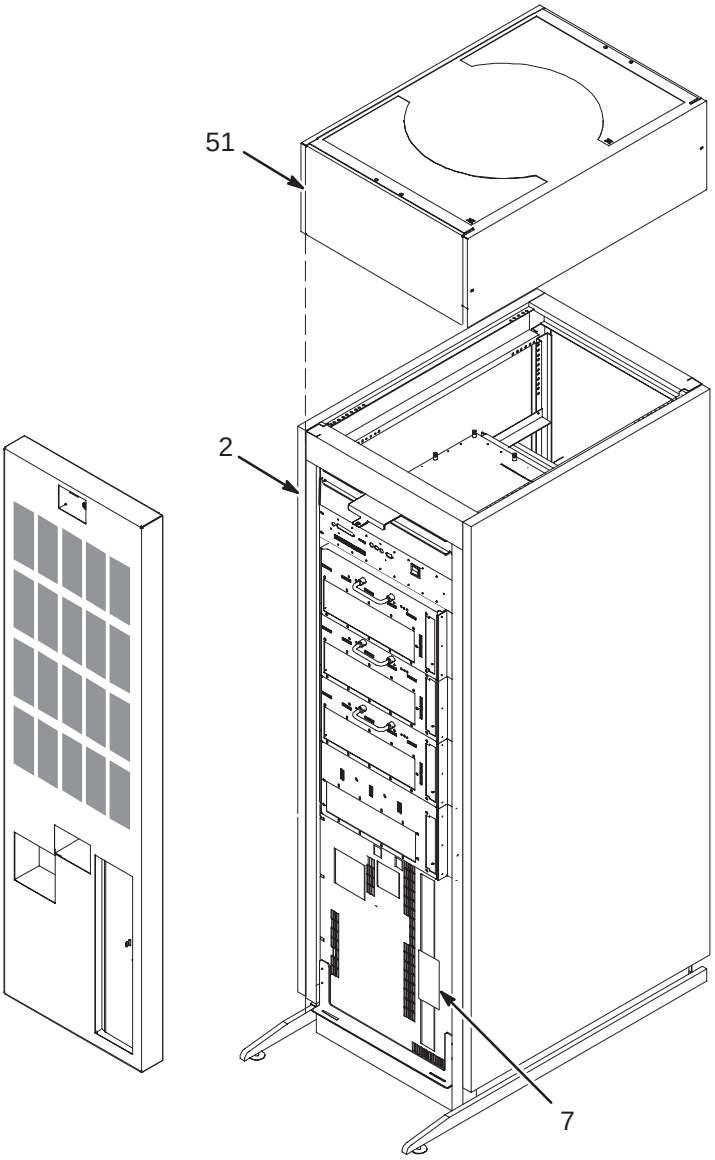

ACGD/PDU CABINET ASM 2284300 FRU N (PART OF 2355992 PAGE 1–90)

Item	Part Number	FRU	Name	Quantity	Description (Remarks)
2	2284299	N	ASSEMBLY	1	GEMSPRO ACGD CABINET ASM **(SEE PAGE 15–4)**
7	2315641	N	TAG	1	ACGD INSTALLATION TAG
51A	2299215	1	FAN ASM	1	ACGD CABINET FAN ASSEMBLY **(SEE PAGE 15–8)**
51B	2173642–2	N	FAN ASSEMBLY	ALT	FAN ASSEMBLY FOR ACGD CABINET

ACGD/PDU CABINET ASM **2238915 & 2284299**

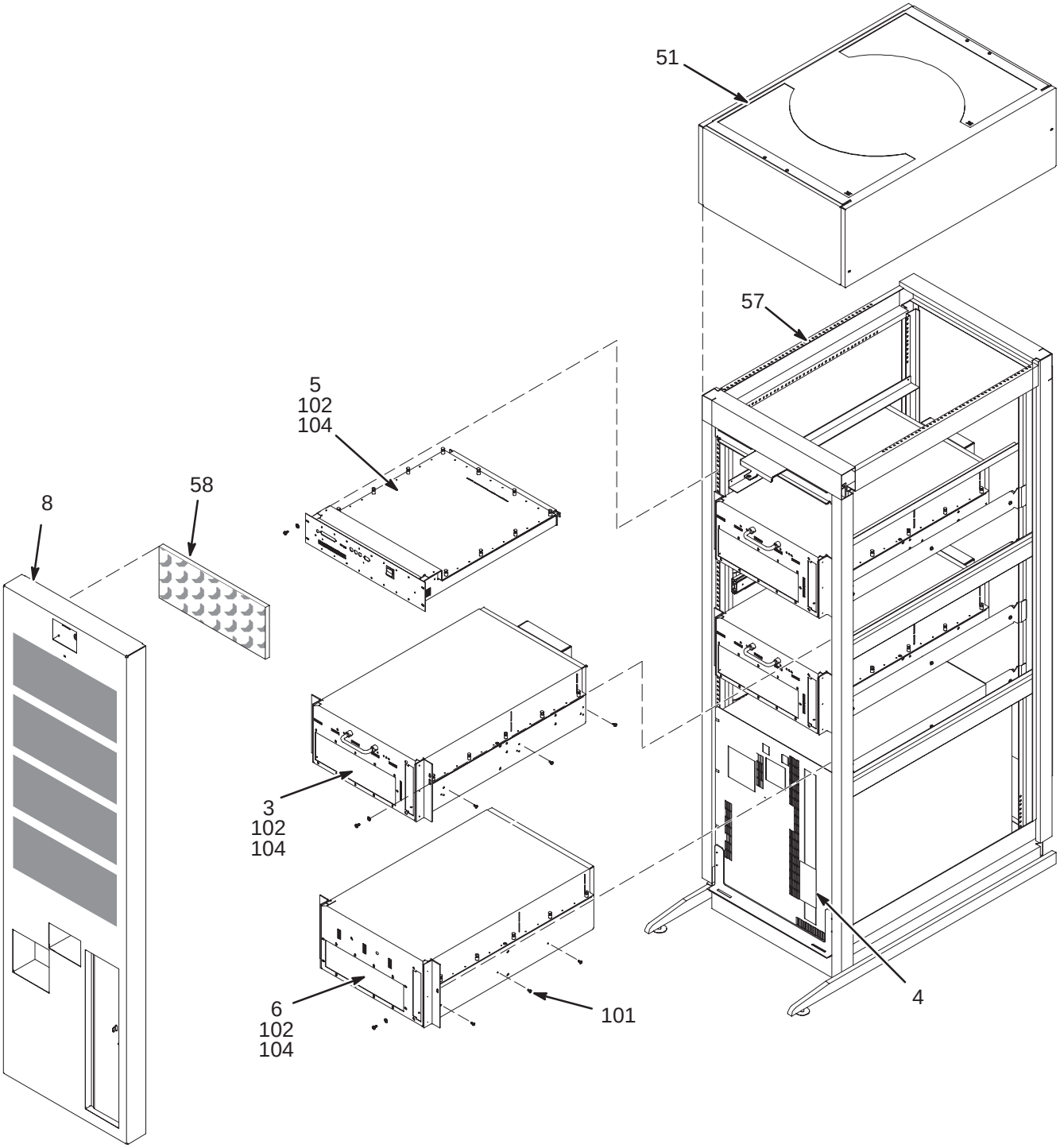

ACGD/PDU CABINET ASM 2238915 FRU N (PART OF 2355992 PAGE 1–90)

Item	Part Number	FRU	Name	Quantity	Description (Remarks)
3	2270055	2	PART	3	ACGD.SGA_ASSEMBLY
	2270055–2	1	FRU	1	ACGD SGA ASM w/FRU PACKAGING **(SEE PAGE 15–5)**
4	2315641	N	TAG	1	ACGD INSTALLATION TAG
5	2248992–3	N	PART	1	GP2 ASSEMBLY FOR ACGD
	2248992–4	1	FRU	1	GP2 ASM FOR ACGD w/FRU PACKAGING **(SEE PAGE 15–6)**
6A	2334862–3	N	POWER SUPPLY	1	ACGD SGA PS ASM IN DISPOSABLE CRATE
	2334862–2	1	FRU	1	ACGD SGA PS ASM W/FRU PACKAGING **(SEE PAGE 15–7)**
8	2276759	N	COVER ASM	1	FRONT COVER ASSEMBLY
9	2308879	N	FILTER	3	FERRITE FILTER, EMI SUPPRESSION
51A	2299215	1	FAN ASM	1	ACGD CABINET FAN ASSEMBLY **(SEE PAGE 15–8)**
51B	2173642–2	N	FAN ASSEMBLY	ALT	FAN ASSEMBLY FOR ACGD CABINET
57A	2309150	1	PART	1	ACGD BASIC CABINET WITH TEAL PDU **(SEE PAGE 15–9)**
58A	2284074	1	FILTER	4	ALUMINUM AIR FILTER
101	2103585	N	SCREW	24	SCREW PAN HEAD 4 MM 8 MM
102	2279742–2	N	SCREW	12	SCREW PAN HEAD 5 MM 16 MM
104	2109878–7	N	WASHER	12	WASHER PLAIN – NORMAL 5.3 MM 10 MM
130	46–208758P3	N	TY–RAP	1	7.31” X .184” SELF–LOCKING CABLE TIE

ACGD/PDU CABINET ASM 2284299 FRU N (PART OF 2284300 PAGE 15–2)

Item	Part Number	FRU	Name	Quantity	Description (Remarks)
3	2270055	2	PART	3	ACGD.SGA_ASSEMBLY
	2270055–2	1	FRU	1	ACGD SGA ASM w/FRU PACKAGING **(SEE PAGE 15–5)**
5	2248992–3	N	PART	1	GP2 ASSEMBLY FOR ACGD
	2248992–4	1	FRU	1	GP2 ASM FOR ACGD w/FRU PACKAGING **(SEE PAGE 15–6)**
6A	2334862–3	N	POWER SUPPLY	1	ACGD SGA PS ASM IN DISPOSABLE CRATE
	2334862–2	1	FRU	1	ACGD SGA PS ASM W/FRU PACKAGING **(SEE PAGE 15–7)**
6B	2317092	N	POWER SUPPLY	ALT	SGA ACGD POWER SUPPLY ASSEMBLY
	2317092–2	1	FRU	1	SGA ACGD P.S. ASM w/FRU PACKAGING **(SEE PAGE 15–7)**
6C	2284857	N	PART	ALT	POWER_SUPPLY_ASSEMBLY_SGA_ACGD
8	2276759	N	COVER ASM	1	FRONT COVER ASSEMBLY
9	2308879	N	FILTER	3	FERRITE FILTER, EMI SUPPRESSION
57A	2309150	2	PART	1	ACGD BASIC CABINET WITH TEAL PDU **(SEE PAGE 15–9)**
57B	2293455	N	PART	ALT	ACGD BASIC CABINET
58	2284074	1	FILTER	4	ALUMINUM AIR FILTER
101	2103585	N	SCREW	24	SCREW PAN HEAD 4 MM 8 MM
102	2279742–2	N	SCREW	12	SCREW PAN HEAD 5 MM 16 MM
104	2109878–7	N	WASHER	12	WASHER PLAIN – NORMAL 5.3 MM 10 MM
130	46–208758P3	N	TY–RAP	5	7.31” X .184” SELF–LOCKING CABLE TIE

ACGD SGA MODULE **2270055–2**

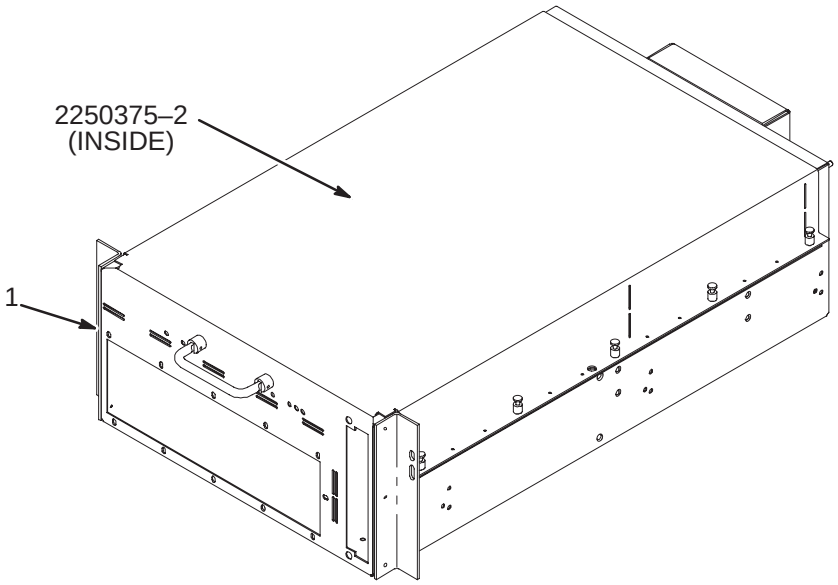

ACGD SGA MODULE **2270055–2 FRU 1** **(PART 3 OF 2238915 PAGE 15–4)**
(PART 3 OF 2284300 PAGE 15–4)

Item	Part Number	FRU	Name	Quantity	Description (Remarks)
1	2270055	2	PART	1	ACGD.SGA_ASSEMBLY
2	2190408–3	N	BOX	1	SHIPPING BOX FOR ACGD–SGA FRU
	2250375–2	1	BOARD	1	CONTROL BOARD ASSEMBLY SGA

GRADIENT PROCESSOR ASM MODULE (GP2) 2248992–4

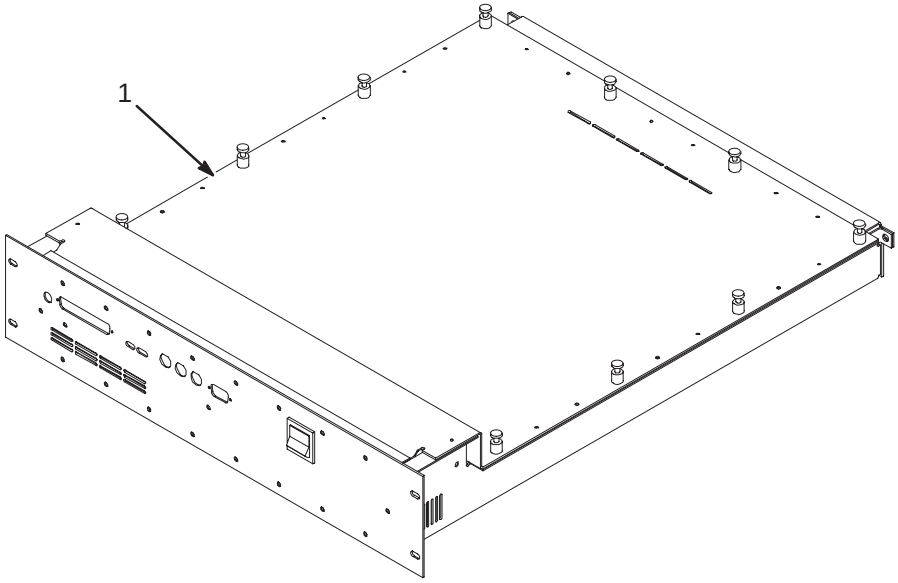

GP2 MODULE 2248992–4 FRU 1 (PART 5 OF 2238915 PAGE 15–4)
(PART 5 OF 2284300 PAGE 15–4)

Item	Part Number	FRU	Name	Quantity	Description (Remarks)
1	2248992–3	N	PART	1	GP2 ASSEMBLY FOR ACGD
2	2260402	N	FOAM	1	CORRUGATED/FOAM PACKAGING
3	2260403	N	BOX	1	CORRUGATED CONTAINER

SGA POWER SUPPLY ASSEMBLY **2334862–2 & 2317092–2**

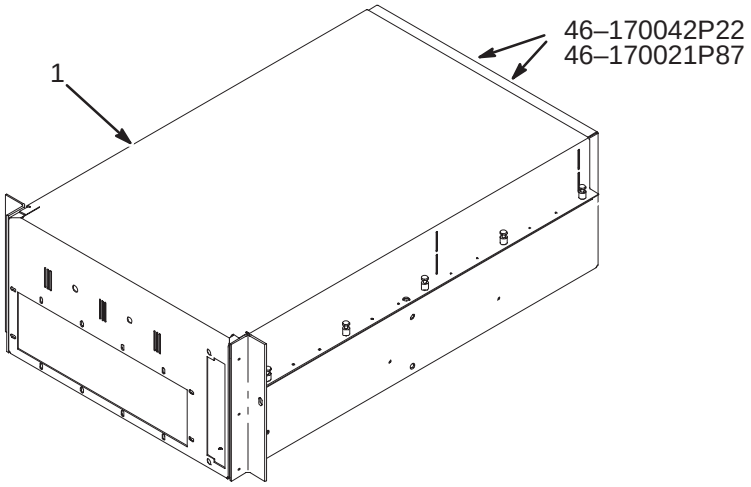

SGA POWER SUPPLY ASM **2334862–2 FRU 1** **(PART 6A OF 2238915 PAGE 15–4)**
(PART 6A OF 2284300 PAGE 15–4)

Item	Part Number	FRU	Name	Quantity	Description (Remarks)
1	2334862	N	POWER SUPPLY	1	POWER SUPPLY ASSEMBLY SGA ACGD
2	2190408–4	N	BOX	1	SHIPPING BOX FOR ACGD–SGA PS FRU
	46–170021P87	1	FUSE	2	0.1000A 600V CARTRIDGE FAST UL/C
	46–170042P22	1	FUSE	2	30A, 600V PANEL–MOUNTED FUSE

SGA POWER SUPPLY ASM **2317092–2 FRU 1** **(PART 6B OF 2238915 PAGE 15–4)**
(PART 6B OF 2284300 PAGE 15–4)

Item	Part Number	FRU	Name	Quantity	Description (Remarks)
1	2317092	N	POWER SUPPLY	1	SGA ACGD POWER SUPPLY ASSEMBLY
2	2190408–4	N	BOX	1	SHIPPING BOX FOR ACGD–SGA PS FRU
	46–170021P87	1	FUSE	2	0.1000A 600V CARTRIDGE FAST UL/C
	46–170042P22	1	FUSE	2	30A, 600V PANEL–MOUNTED FUSE

ACGD CABINET FAN ASSEMBLY 2299215

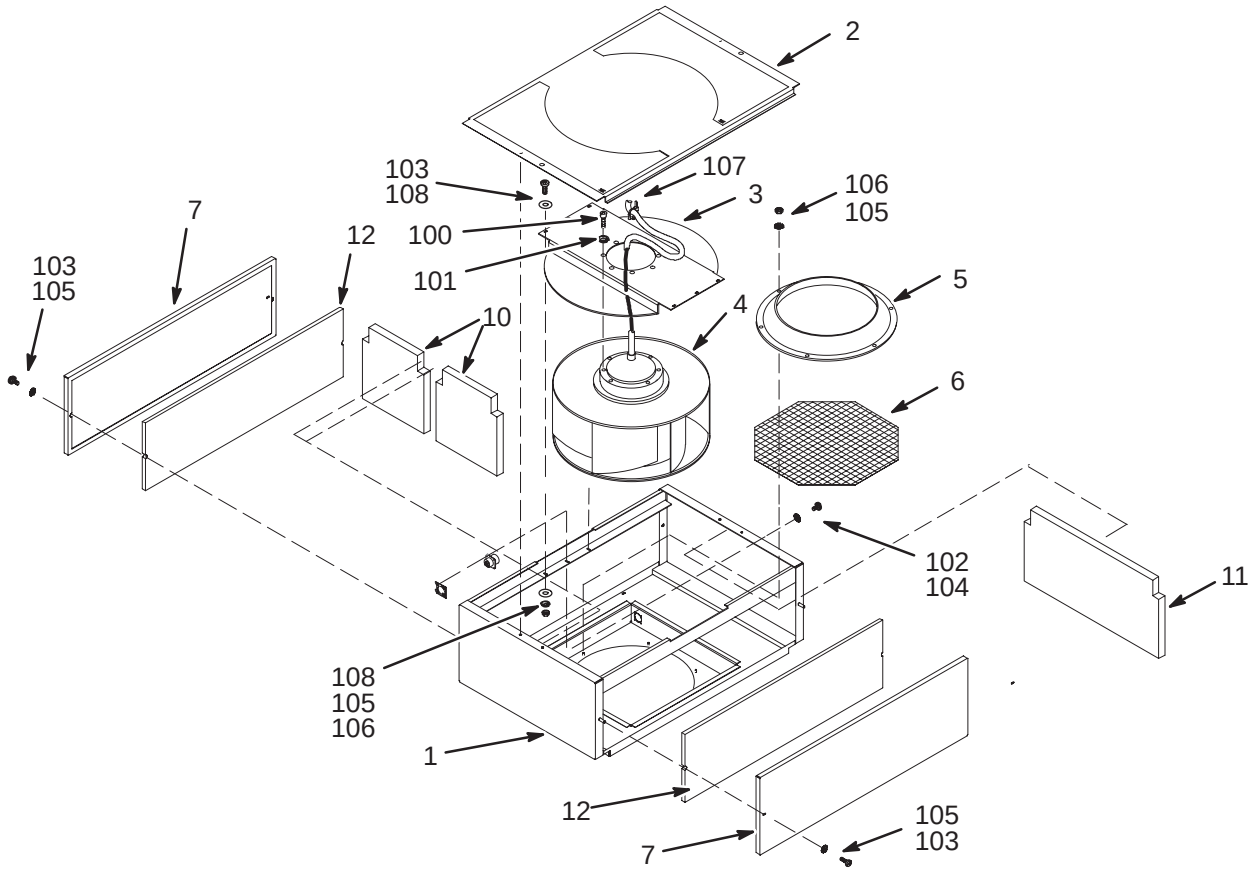

ACGD CABINET FAN ASSEMBLY 2299215 FRU 1

(PART 51 OF 2238915 PAGE 15–4)
(PART 51 OF 2284300 PAGE 15–4)
(PART OF M3000DB PAGE 1–60)
(PART 1 OF 2381388 PAGE 1–90)

Item	Part Number	FRU	Name	Quantity	Description (Remarks)
1	2167400–2	N	CHASSIS	1	FAN CHASSIS ASSEMBLY—GE GRAY #4
2	2167402–2	N	COVER ASM	1	FAN TOP COVER ASSEMBLY—GE GRAY #4
3	2299212	N	BRACKET	1	ACGD FAN SUPPORT BRACKET
4	2299214	1	FAN,COOLING	1	ACGD CABINET FAN PURCHASE SPEC
5	2299213	N	RING, MTG	1	ACGD CABINET INLET RING FOR FAN
6	2179241	N	PART	1	SCREEN, FAN FINGER GUARD
7	2181133–2	N	COVER	2	SIDE COVER FOR FAN MODULE—GE GRAY#1
10	2181594	N	BARRIER	2	ACOUSTICAL FOAM BARRIER (FRONT)
11	2181594–2	N	BARRIER	1	ACOUSTICAL FOAM BARRIER (BACK)
12	2181595	N	BARRIER	2	ACOUSTICAL FOAM BARRIER (SIDES)
100	46–328417P21	N	SCREW	4	SCREW HEXAGON SOCKET 10 MM 16 MM
101	46–328432P4	N	WASHER	4	WASHER LOCK – SPRING 10.2 MM 18.1 MM
102	46–328421P6	N	SCREW	4	SCREW PAN HEAD 2.5 MM 10 MM
103	46–328421P16	N	SCREW	10	SCREW PAN HEAD 4 MM 16 MM
104	46–328433P1	N	WASHER	4	WASHER LOCK – EXTERNAL 2.7 MM 5.5 MM
105	46–328433P2	N	WASHER	16	WASHER LOCK – EXTERNAL 4.3 MM 8 MM
106	46–328425P1	N	NUT	12	NUT HEXAGON 4 MM
107	46–208758P2	N	TY–RAP	2	5.5” X .140” SELF–LOCKING CABLE TIE.
108	46–328430P2	N	WASHER	12	WASHER PLAIN – NORMAL 4.3MM 9MM

ACGD BASIC CABINET w/TEAL PDU 2309150

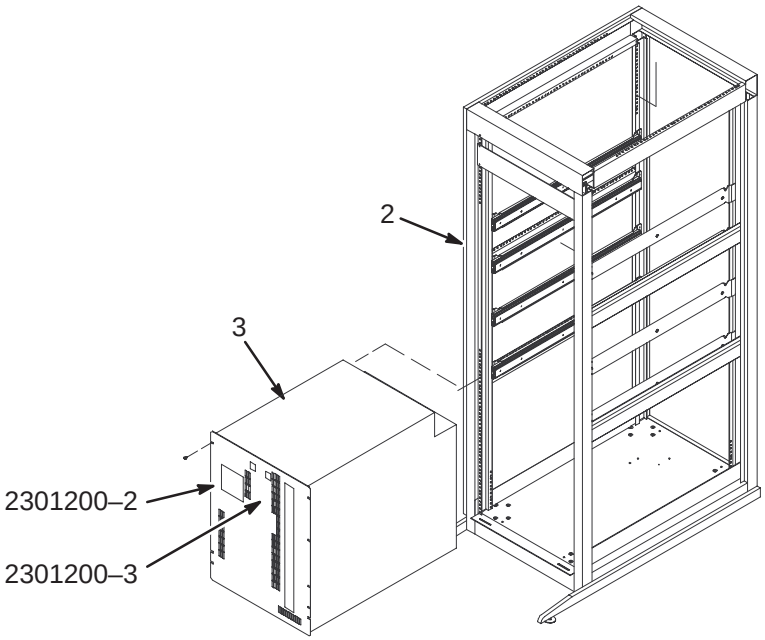

ACGD BASIC CABINET w/TEAL PDU 2309150 FRU 1 **(PART 57 OF 2238915 PAGE 15–4)**
(PART 57 OF 2284300 PAGE 15–4)

Item	Part Number	FRU	Name	Quantity	Description (Remarks)
2	2347720	N	CABINET ASM	1	ACGD CABINET ASM WITH RAILS
3	2301200	N	PDU	1	COST REDUCED ACGD PDU
14	2178851–6	N	CABLE	1	MR3PDU–GP TO MR3GP (208 VOLTS)
15	2178851–7	N	CABLE	1	MR3PDU–SGA–X TO MR3SGA–X–J6
16	2178851–8	N	CABLE	1	MR3PDU–SGA–Y TO MR3SGA–Y–J6
17	2178851–9	N	CABLE	1	MR3PDU–SGA–Z TO MR3SGA–Z–J6
19	2255765	N	PART	1	MR3SGAPS–J1 TO MR3SGA–X–J1
20	2255765–2	N	PART	1	MR3SGAPS–J4 TO MR3SGA–X–J4
21	2255765–3	N	PART	1	MR3SGAPS–J2 TO MR3SGA–Y–J1
22	2255765–4	N	PART	1	MR3SGAPS–J5 TO MR3SGA–Y–J4
23	2255765–5	N	PART	1	MR3SGAPS–J3 TO MR3SGA–Z–J1
24	2255765–6	N	PART	1	MR3SGAPS–J6 TO MR3SGA–Z–J4
26	46–328000G996	N	ASSEMBLY	1	MR3–GP–J8 TO MR3–SGA–Y–J5
27	46–328000G998	N	ASSEMBLY	1	MR3–SGAPS–J7 TO MR3–GP–J10
28	46–328000G997	N	ASSEMBLY	1	MR3–GP–J9 TO MR3–SGA–Z–J5
30	46–328000G995	N	ASSEMBLY	1	MR3–GP–J7 TO MR3–SGA–X–J5
37	2178853–7	N	CABLE	1	MR3PDUSGA–Z– TO MR3SGA–Z–J3
38	2178853–8	N	CABLE	1	MR3PDUSGA–Z+ TO MR3SGA–Z–J2
39	2178853–9	N	CABLE	1	MR3PDUSGA–Y– TO MR3SGA–Y–J3
40	2178853–10	N	CABLE	1	MR3PDUSGA–Y+ TO MR3SGA–Y–J2
41	2178853–11	N	CABLE	1	MR3PDUSGA–X– TO MR3SGA–X–J3
42	2178853–12	N	CABLE	1	MR3PDUSGA–X+ TO MR3SGA–X–J2
56	2180280–2	N	CABLE	1	ACGD FAN CABLE
57	2271643	N	LEAD DATA	1	ACGD CABINET GROUND LEADS
102	2279742–2	N	SCREW	18	SCREW PAN HEAD 5 MM 16 MM
114	2271045	N	CABLE	1	MR3PDUACGD TO MR3SGAPS–TS1
	2301200–2	1	BOARD	1	CONTROL PC BOARD
	2301200–3	1	MODULE	1	TVSS MODULE

ACGD BASIC CABINET w/PHOENIX PDU 2238916

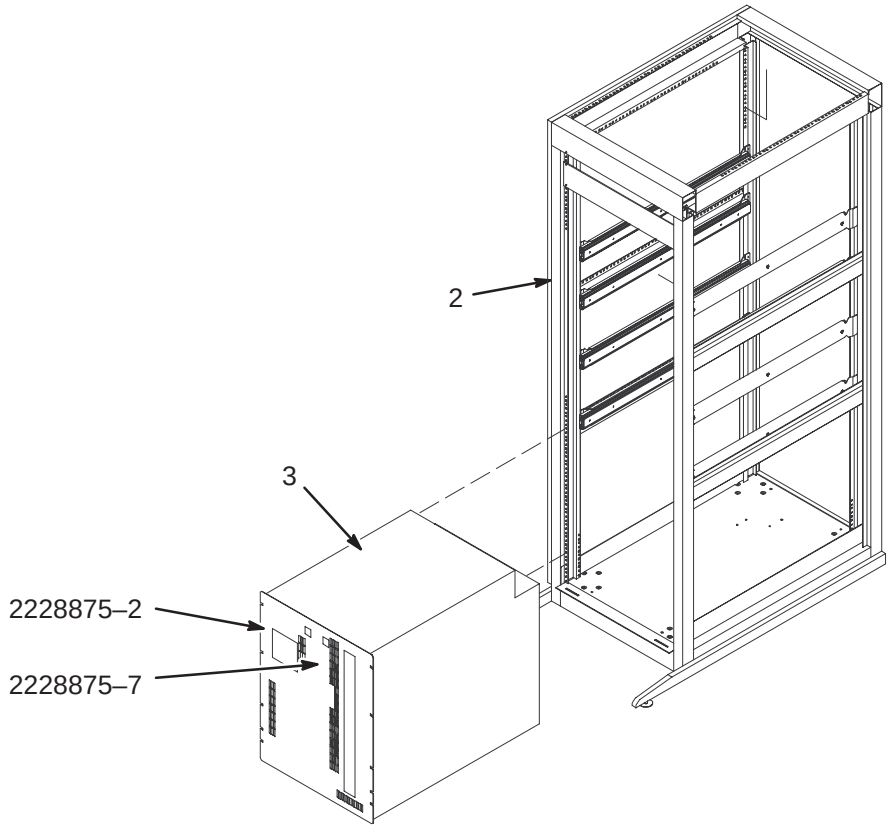

ACGD BASIC CABINET w/PHOENIX PDU 2238916 FRU 1 (PART 57 OF 2238915 PAGE 15–4)

Item	Part Number	FRU	Name	Quantity	Description (Remarks)
2	2272201	N	CABINET ASM	1	ACGD CABINET ASM WITH RAILS
2A	2345227	N	CABINET	ALT	ACGD BASIC CABINET
3	2251117	N	PDU	1	GRFD PDU
	2228875–2	1	BOARD	1	CONTROL PC BOARD
	2228875–7	1	MODULE	1	TVSS MODULE
10	2270930	N	OUT OF CATAL	4.0	STEEL BALL BEARING SLIDE 28 IN 273LB
11	2270636	N	PART	8.0	BRACKET,SLIDE MOUNTING
14	2178851–6	N	CABLE	1.0	MR3PDU–GP TO MR3GP (208 VOLTS)
15	2178851–7	N	CABLE	1.0	MR3PDU–SGA–X TO MR3SGA–X–J6
16	2178851–8	N	CABLE	1.0	MR3PDU–SGA–Y TO MR3SGA–Y–J6
17	2178851–9	N	CABLE	1.0	MR3PDU–SGA–Z TO MR3SGA–Z–J6
19	2255765	N	PART	1.0	MR3SGAPS–J1 TO MR3SGA–X–J1
20	2255765–2	N	PART	1.0	MR3SGAPS–J4 TO MR3SGA–X–J4
21	2255765–3	N	PART	1.0	MR3SGAPS–J2 TO MR3SGA–Y–J1
22	2255765–4	N	PART	1.0	MR3SGAPS–J5 TO MR3SGA–Y–J4
23	2255765–5	N	PART	1.0	MR3SGAPS–J3 TO MR3SGA–Z–J1
24	2255765–6	N	PART	1.0	MR3SGAPS–J6 TO MR3SGA–Z–J4
26	46–328000G996	N	ASSEMBLY	1.0	MR3–GP–J8 TO MR3–SGA–Y–J5
27	46–328000G998	N	ASSEMBLY	1.0	MR3–SGAPS–J7 TO MR3–GP–J10
28	46–328000G997	N	ASSEMBLY	1.0	MR3–GP–J9 TO MR3–SGA–Z–J5

ACGD BASIC CABINET w/PHOENIX PDU 2238916 FRU 1 **(Continued from previous page)**

Item	Part Number	FRU	Name	Quantity	Description (Remarks)
30	46–328000G995	N	ASSEMBLY	1.0	MR3–GP–J7 TO MR3–SGA–X–J5
37	2178853–7	N	CABLE	1.0	MR3PDUSGA–Z– TO MR3SGA–Z–J3
38	2178853–8	N	CABLE	1.0	MR3PDUSGA–Z+ TO MR3SGA–Z–J2
39	2178853–9	N	CABLE	1.0	MR3PDUSGA–Y– TO MR3SGA–Y–J3
40	2178853–10	N	CABLE	1.0	MR3PDUSGA–Y+ TO MR3SGA–Y–J2
41	2178853–11	N	CABLE	1.0	MR3PDUSGA–X– TO MR3SGA–X–J3
42	2178853–12	N	CABLE	1.0	MR3PDUSGA–X+ TO MR3SGA–X–J2
55	2168691	N	BRACKET	2.0	MODULE SUPPORT BRACKET
56	2180280–2	N	CABLE	1.0	ACGD FAN CABLE
57	2271643	N	LEAD DATA	1.0	ACGD CABINET GROUND LEADS
100	2180698	N	NUT	8.0	NUT CLIP ON 4 MM
101	46–328421P15	N	PDM PART	28.0	SCREW PAN HEAD 4 MM 12 MM
102	2279742–2	N	SCREW	18.0	SCREW PAN HEAD 5 MM 16 MM
103	46–328421P23	N	PDM PART	32.0	SCREW PAN HEAD 6 MM 10 MM
105	46–328422P14	N	PDM PART	4.0	SCREW COUNTERSUNK HEA 4 MM 10 MM
110	46–170686P1	N	ADHESIVE	0.0	LOCTITE 242, 0.5CC TUBE
112	46–208758P3	N	TY–RAP	23.0	7.31” X .184” SELF–LOCKING CABLE TIE
113	2245686	N	COVER	1.0	BRACKET COVER
114	2271045	N	CABLE	1.0	MR3PDUACGD TO MR3SGAPS–TS1
115	2265503	N	PART	1.0	BRACKET,SLAM LATCH,ACGD
116	2180698–2	N	NUT	34.0	NUT CLIP ON 5 MM