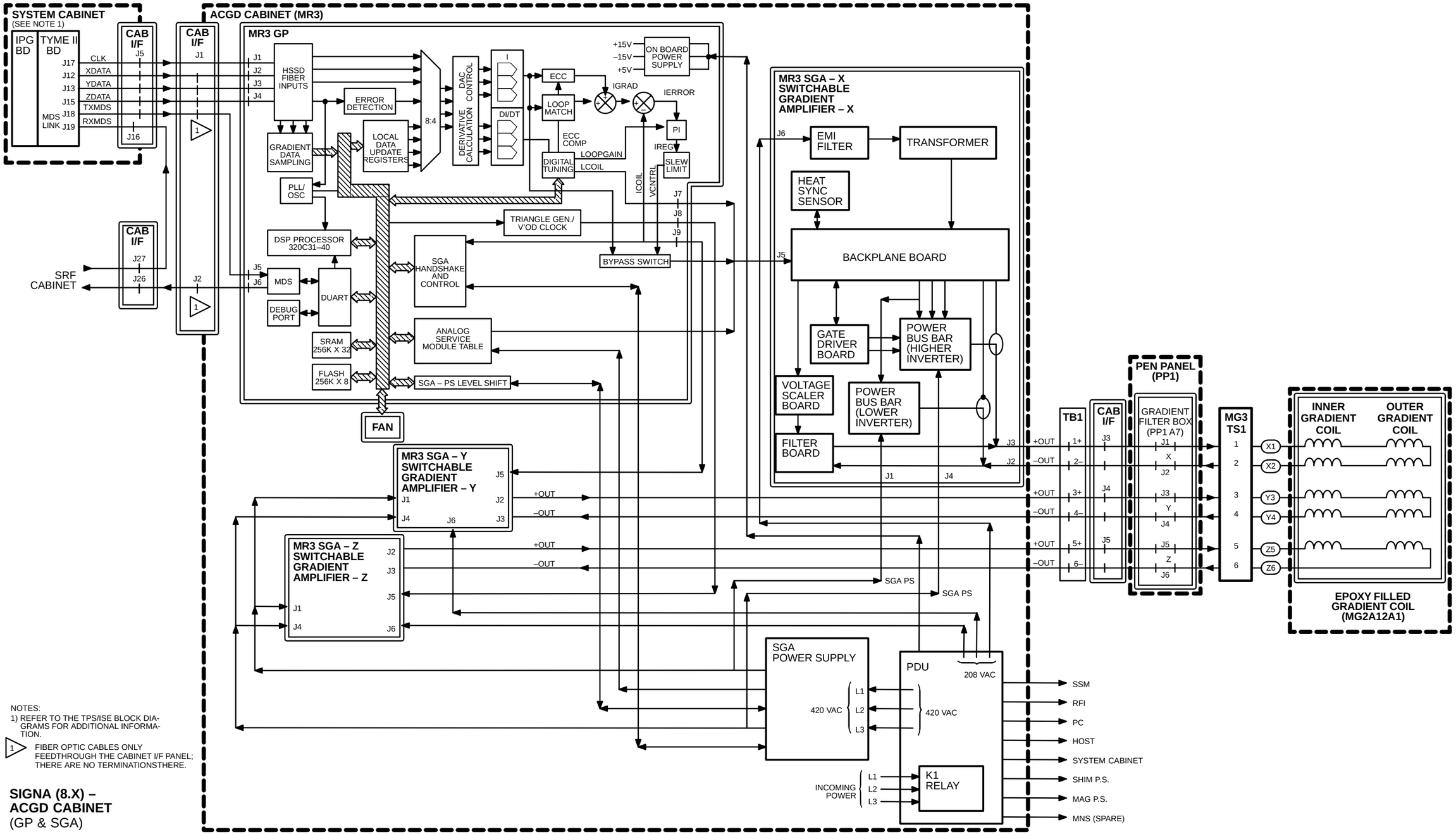

NOTES:
1) REFER TO THE TPS/ISE BLOCK DIAGRAMS FOR ADDITIONAL INFORMATION.

1 FIBER OPTIC CABLES ONLY FEEDTHROUGH THE CABINET I/F PANEL; THERE ARE NO TERMINATIONSTHERE.

SIGNA (8.X) – ACGD CABINET
(GP & SGA)