OVER VIEW

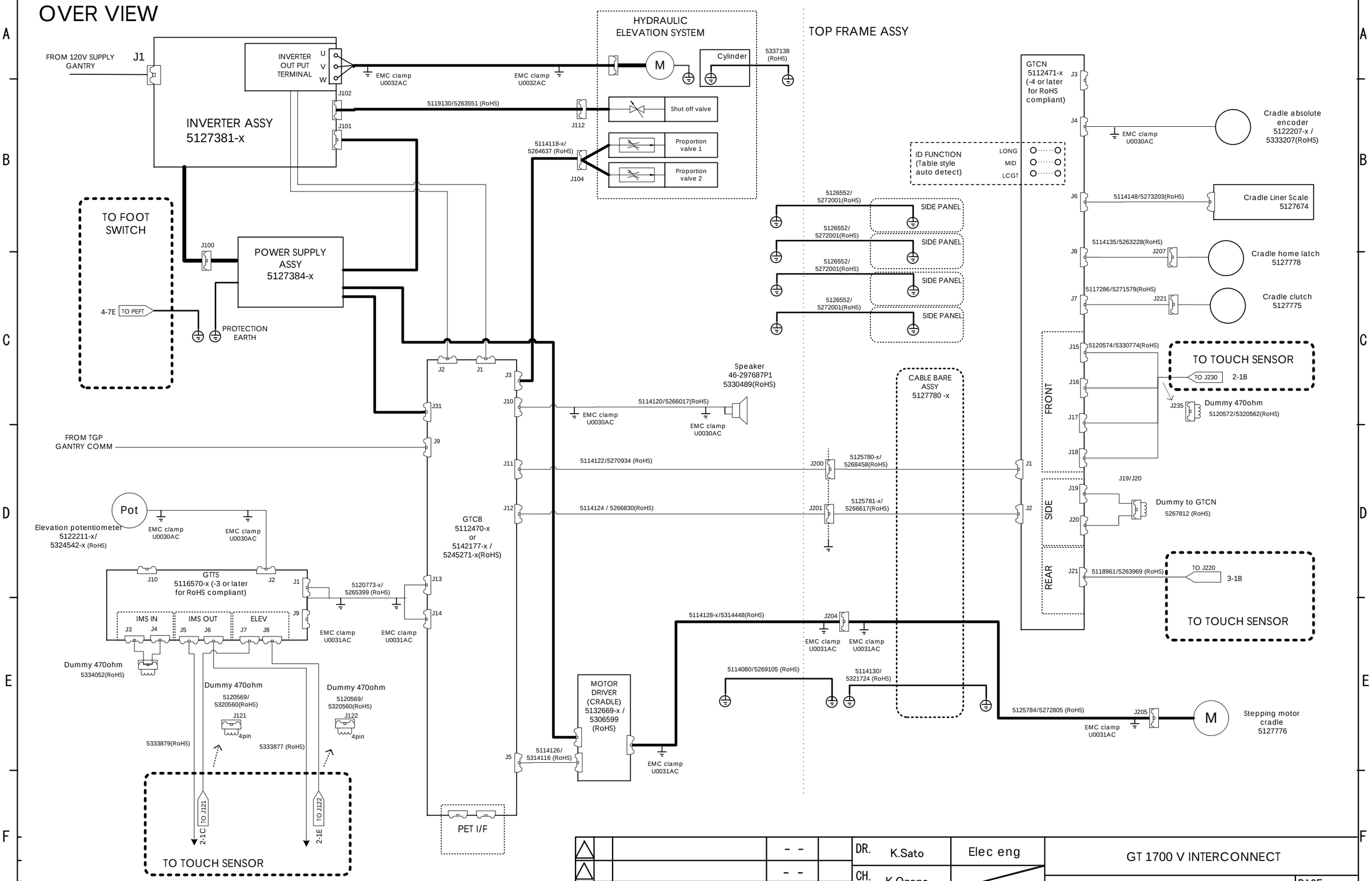

REV.	ZONE		DATE	REV. BY
			- -	
			- -	
1	All	Initial release	May-27-09	K.Sato

DR.	K.Sato	Elec eng
CH.	K.Ozono	
APP.	Y.Satta	May/27/2009

GT 1700 V INTERCONNECT

5122080-10 SCH

PAGE 1 /3

SIZE A3

技術部 MICRO - -

Form Y-13A-1

GE Helthcare