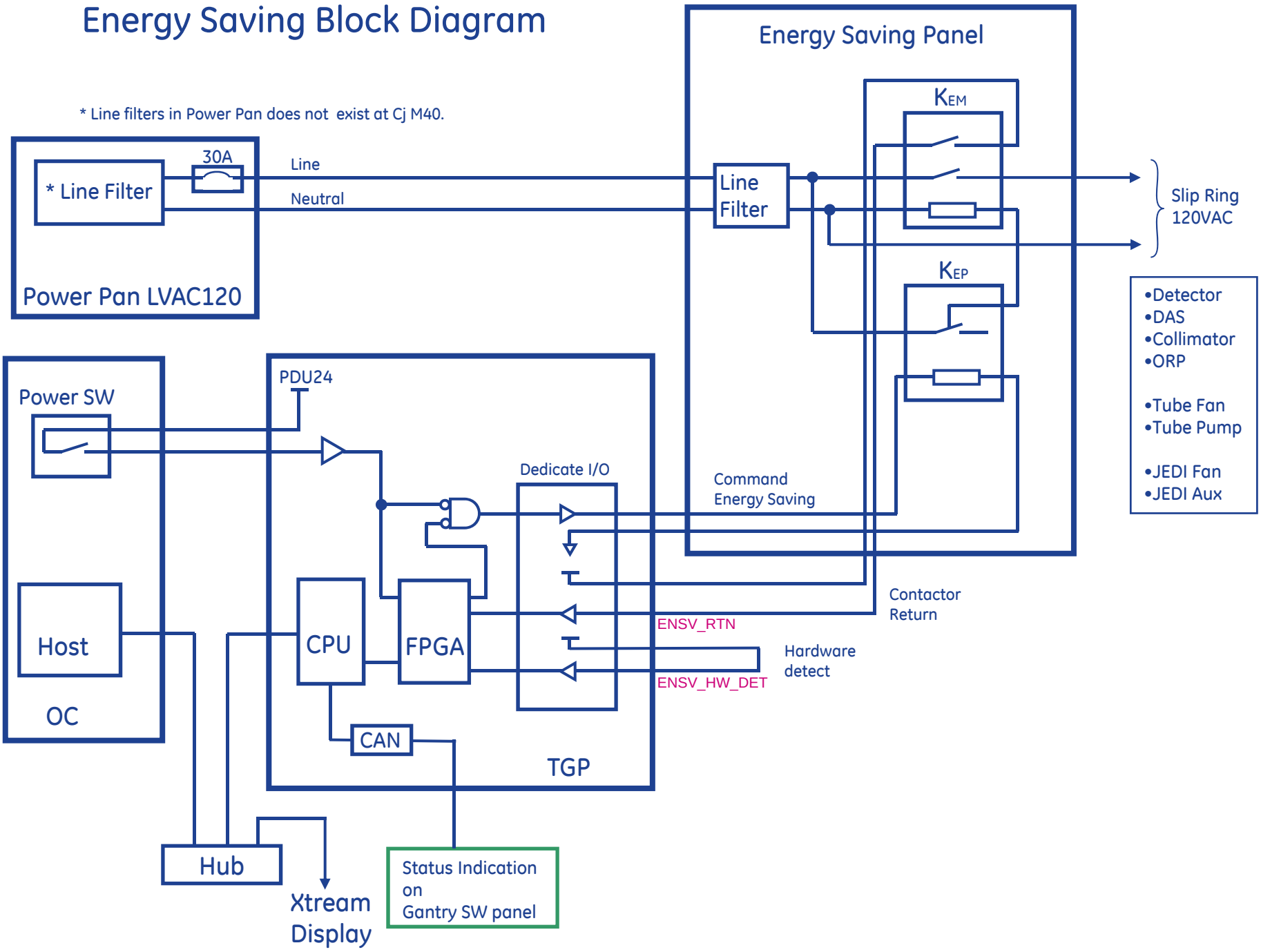Energy Saving Block Diagram