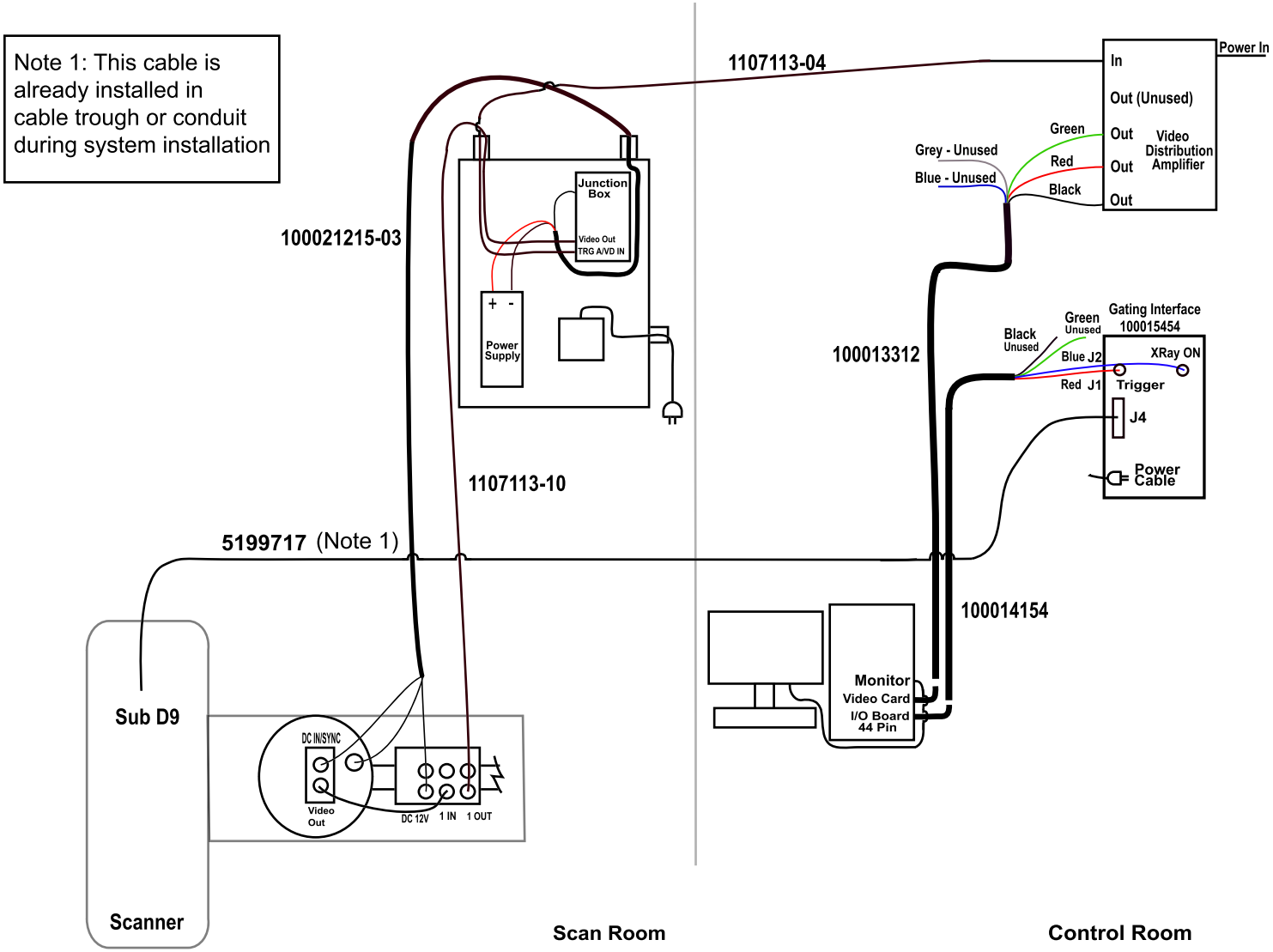
Note 1: This cable is already installed in cable trough or conduit during system installation
1107113-04
Power In
In
Out (Unused)
Out
Out
Out
Video Distribution Amplifier
Green
Red
Black
Grey - Unused
Blue - Unused
Junction Box
Video Out
TRG A/VD IN
100021215-03
+ -
Power Supply
100013312
Black
Unused
Green
Unused
Blue J2
Red J1
Gating Interface
100015454
XRay ON
Trigger
J4
Power Cable
1107113-10
5199717 (Note 1)
100014154
Monitor
Video Card
I/O Board
44 Pin
Sub D9
DC IN/SYNC
Video Out
DC 12V
1 IN
1 OUT
Scanner
Scan Room
Control Room