REVISIONS						
REV	QTY	MADE BY	CH	DATE	ECR/ECO NO.	DESCRIPTION
2		CHRIS MCBRIDE		08OCT07	NONE	
REMOVED ITEMS 13 (5306481) & 22, REPLACED WITH NEW ITEM 13 (5327074)						

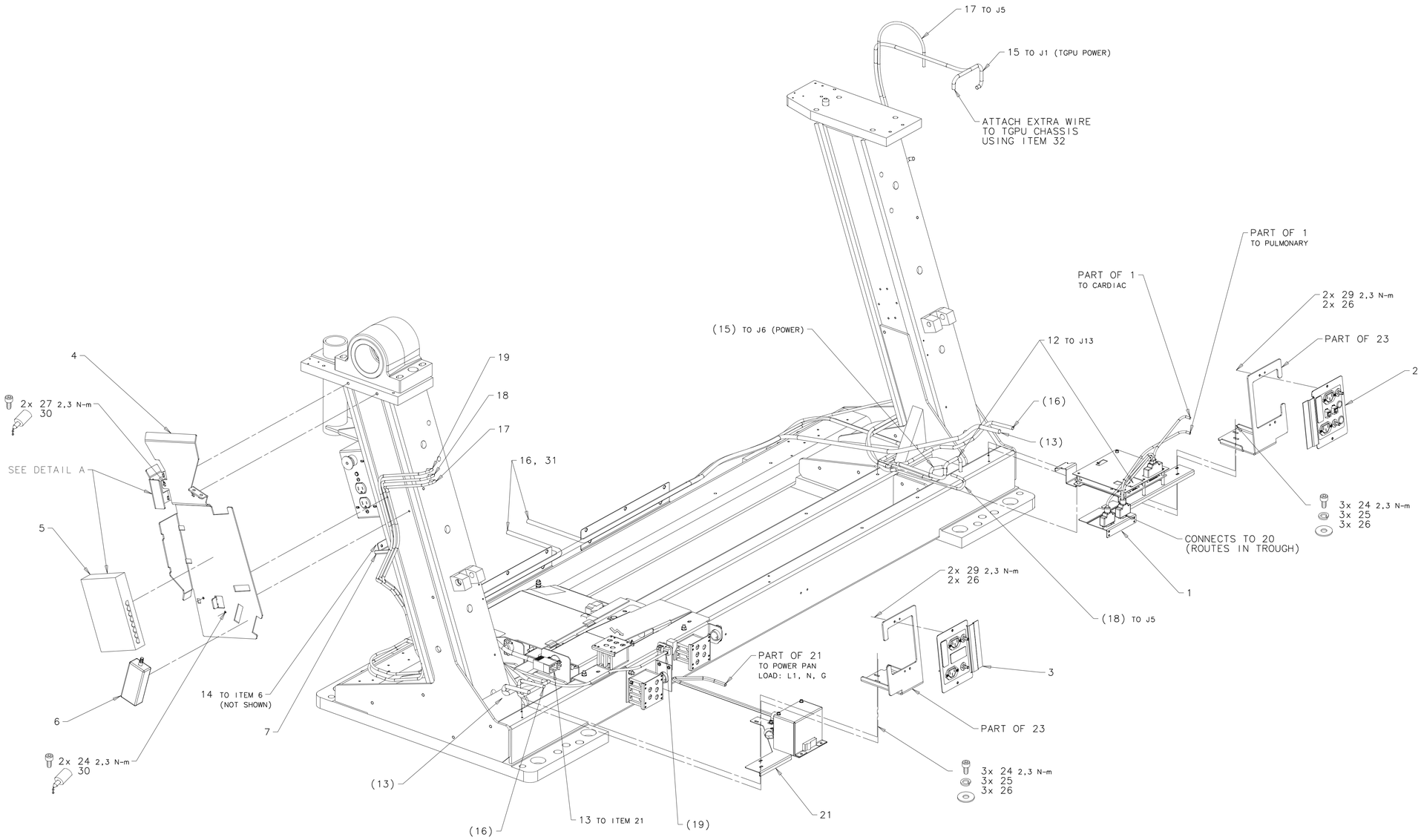

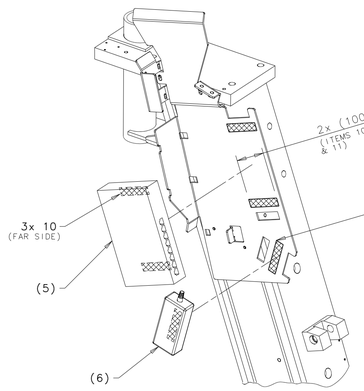

A
UNASSEMBLED

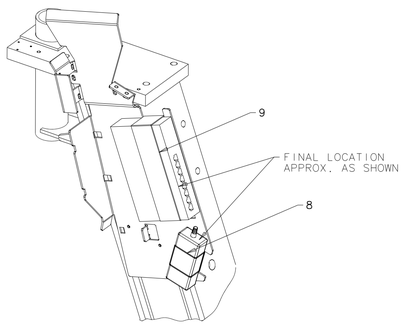

A
ASSEMBLED

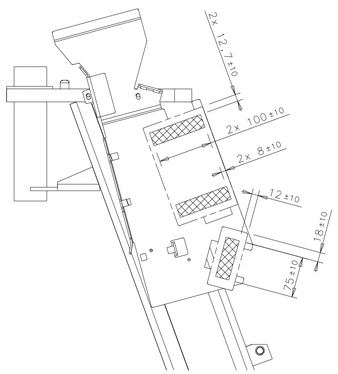

A
VELCRO PLACEMENT

PHYSICAL ID: 5323525

MATERIAL:	FINISH:		SURFACE ROUGHNESS ✓
NOTICE OF CONFIDENTIALITY THIS DOCUMENT IS THE PROPERTY OF GE HEALTHCARE. ITS USE IS AUTHORIZED ONLY FOR RESPONDING TO A REQUEST FOR QUOTATION OR THE PERFORMANCE OF WORK FOR GE HEALTHCARE.	METRIC	APPLIED PRACTICES 46-316849	THIRD ANGLE PROJECTION
	TITLE IPC UPGRADE KIT FOR VCT FIRST MADE FOR: VCT		REV 2
MADE BY CHRIS MCBRIDE 08OCT03 ISSUED	GE HEALTHCARE MILWAUKEE, WI	5323525INS SHEET 1 OF 1	

FIRST DESIGNED IN CONJUNCTION WITH:

I-DEAS A0

DRAWING SHEET - FOR REFERENCE ONLY.
See related Drawing Print for complete definition.