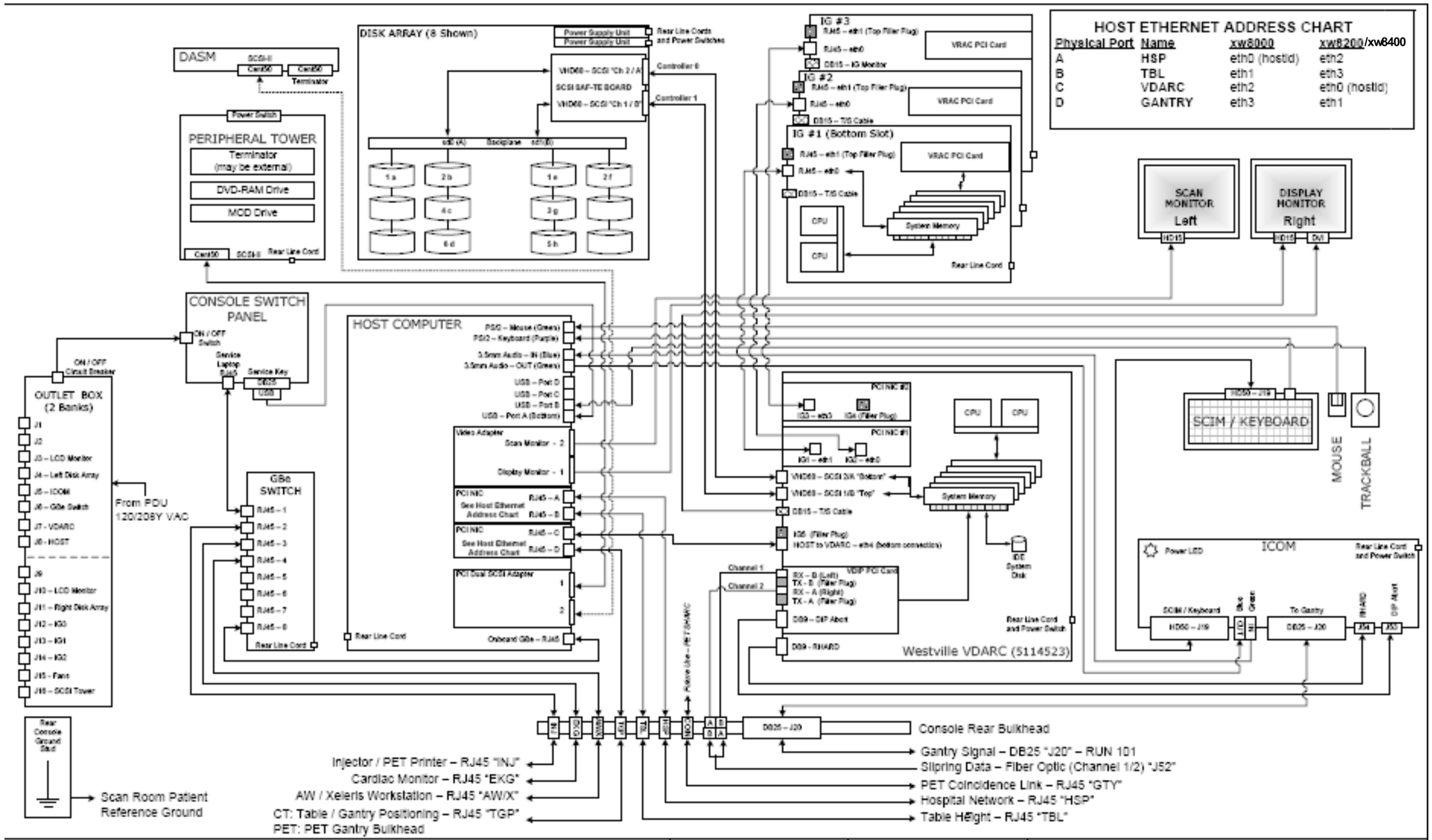

REV --- PCN ------- DESCRIPTION ----- MADE BY DATE APP BY ----- DATE -----	MADE BY: REGA LAMBERT DATE: 8 SEPTEMBER 2006	GE Medical Systems Milwaukee, WI USA	DESIGN TITLE: OPERATOR CONSOLE SCHEMATIC FIRST MADE FOR: GOCS - VOLUME CT WITH WESTVILLE VDARC
REV --- PCN ------- DESCRIPTION ----- MADE BY ------ DATE ----- APP BY ----- DATE -----	ELECTRONIC RELEASE PROCESS NOT DESIGN RELEASED		5115335SCH REV 4 SIZE B SHEET 1 OF 2