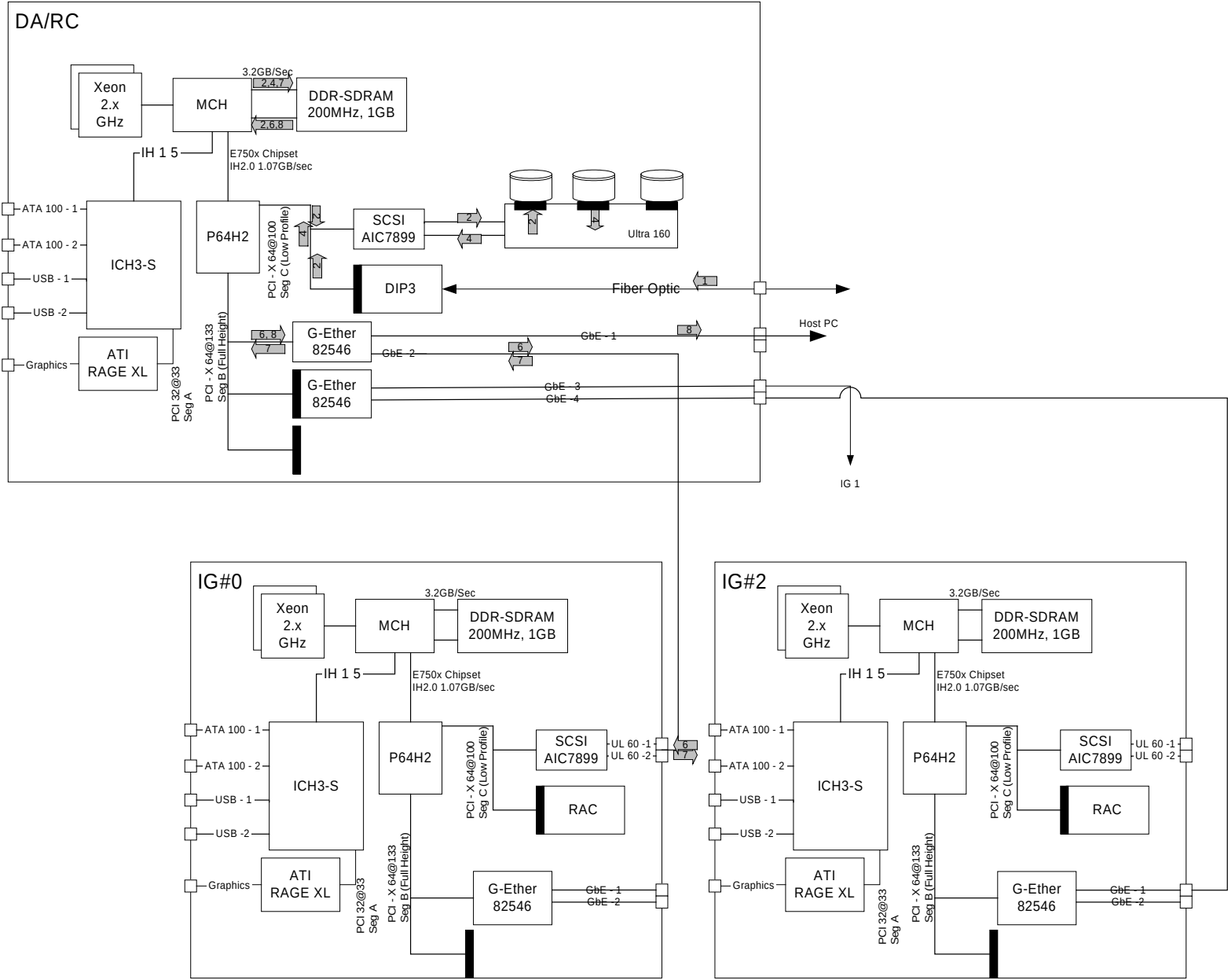
DA/RC
Xeon 2.x GHz
MCH
3.2GB/Sec
2,4,7
2,6,8
DDR-SDRAM 200MHz, 1GB
IH 1 5
E750x Chipset
IH2.0 1.07GB/sec
ATA 100 - 1
ATA 100 - 2
USB - 1
USB -2
Graphics
ICH3-S
ATI RAGE XL
PCI 32@33 Seg A
P64H2
PCI - X 64@133 Seg B (Full Height)
PCI - X 64@100 Seg C (Low Profile)
SCSI AIC7899
Ultra 160
DIP3
Fiber Optic
G-Ether 82546
GbE - 1
GbE - 2
GbE - 3
GbE - 4
Host PC
IG 1
IG#0
IG#2
UL 60 -1
UL 60 -2
RAC