TIO
OPERATOR CONSOLE SCHEMATIC

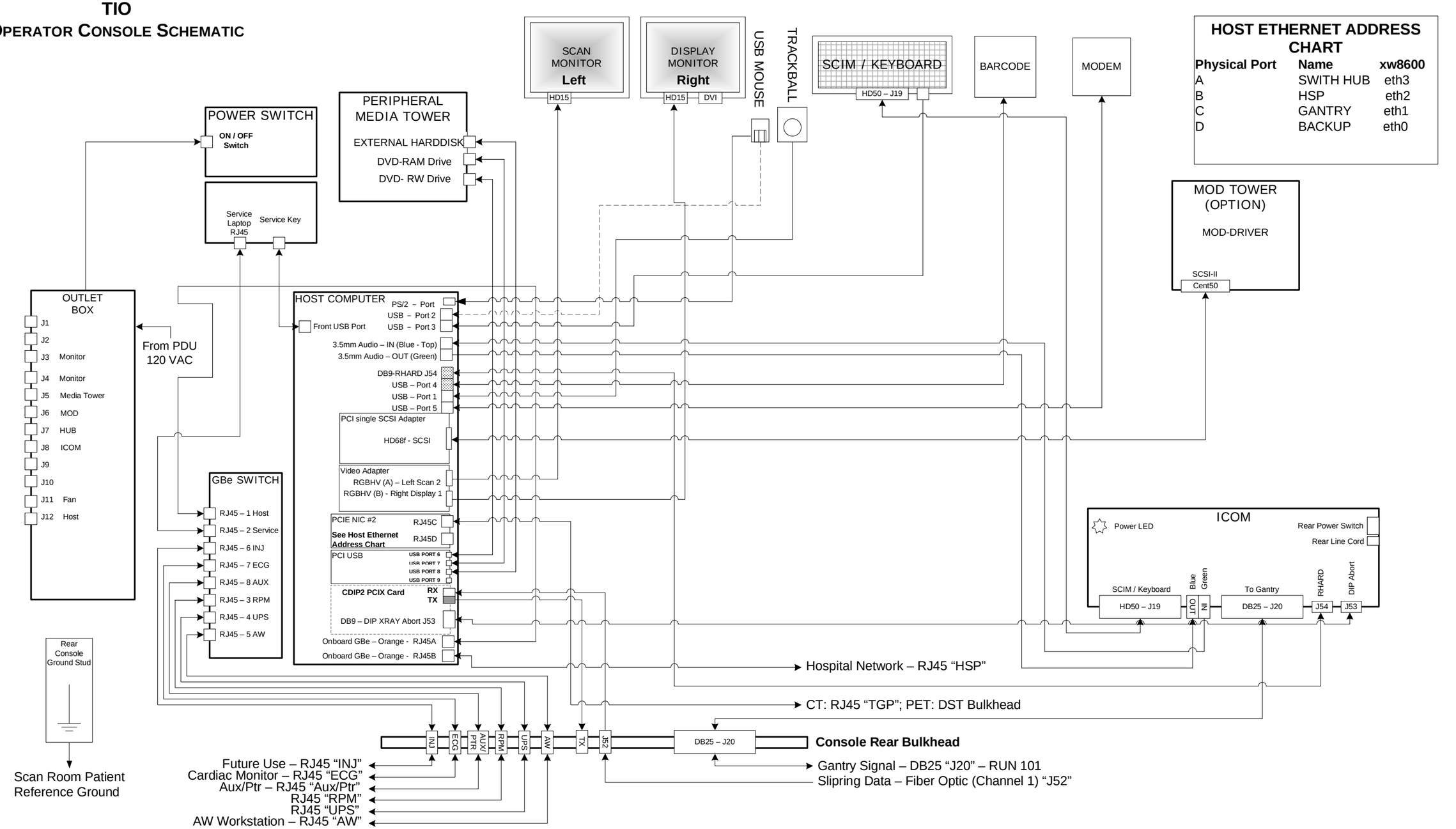

HOST ETHERNET ADDRESS CHART

Physical Port	Name	xw8600
A	SWITH HUB	eth3
B	HSP	eth2
C	GANTRY	eth1
D	BACKUP	eth0

REV	PCN	DESCRIPTION		
MADE BY		DATE	APP BY	DATE
REV	PCN	DESCRIPTION		
MADE BY		DATE	APP BY	DATE

MADE BY: YAO HUANCHAO
DATE: 4-APRIL-2010

ELECTRONIC RELEASE PROCESS
DESIGN RELEASED

GE Healthcare
Milwaukee, WI USA

DESIGN TITLE: OPERATOR CONSOLE SCHEMATIC
FIRST MADE FOR: TIO

5343227SCH | SIZE B | SHEET 1 OF 1

Information Proprietary to GE Medical Systems

This document was created using VISIO. Source Master is stored on the CT Products Engineering ECAD database.