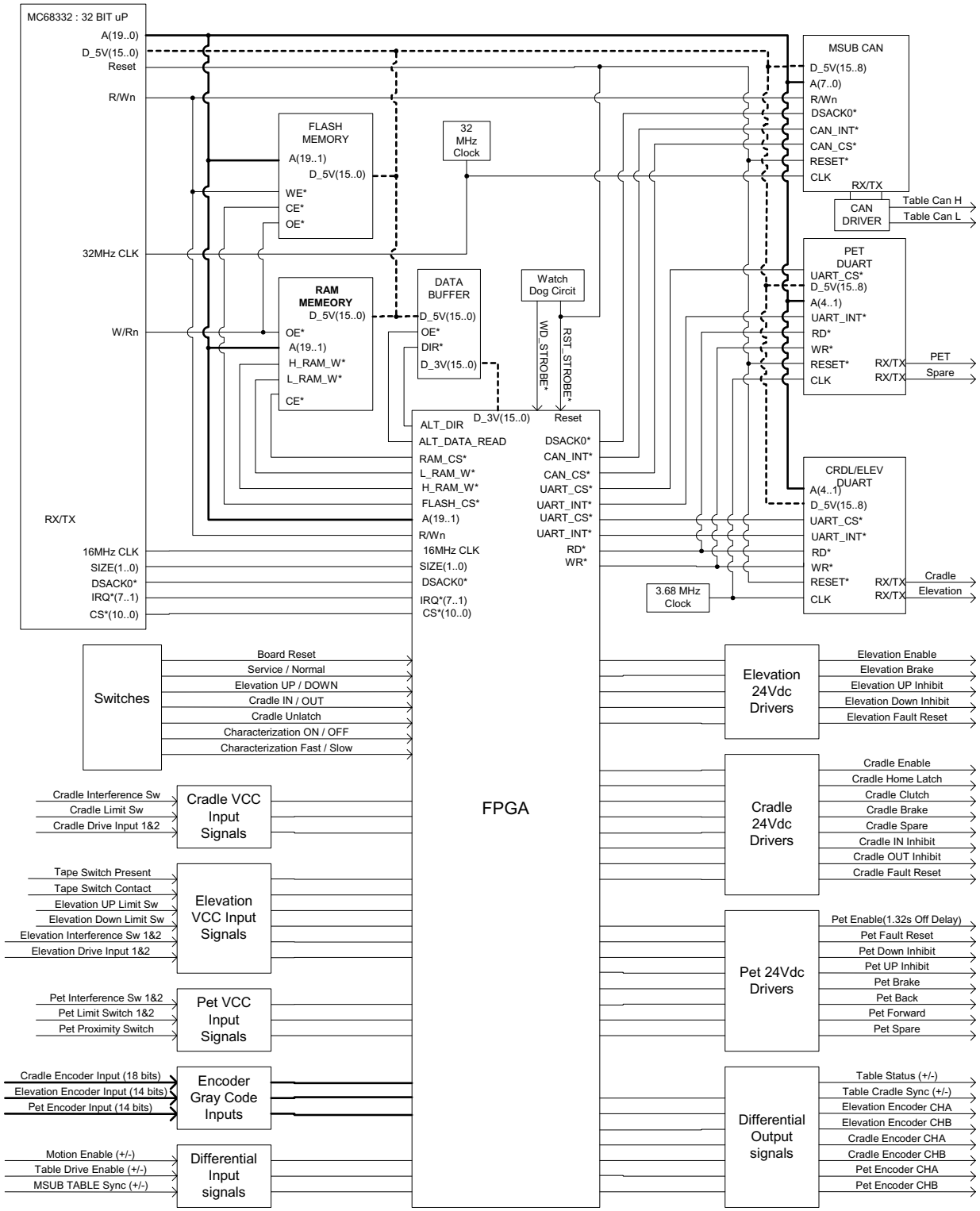
MC68332 : 32 BIT uP
A(19..0)
D_5V(15..0)
Reset
R/Wn
32MHz CLK
W/Rn
RX/TX
16MHz CLK
SIZE(1..0)
DSACK0*
IRQ*(7..1)
CS*(10..0)
FLASH MEMORY
A(19..1)
D_5V(15..0)
WE*
CE*
OE*
32 MHz Clock
RAM MEMEORY
D_5V(15..0)
OE*
A(19..1)
H_RAM_W*
L_RAM_W*
CE*
DATA BUFFER
D_5V(15..0)
OE*
DIR*
D_3V(15..0)
Watch Dog Circit
WD_STROBE*
RST_STROBE*
D_3V(15..0)
Reset
ALT_DIR
ALT_DATA_READ
RAM_CS*
L_RAM_W*
H_RAM_W*
FLASH_CS*
A(19..1)
R/Wn
16MHz CLK
SIZE(1..0)
DSACK0*
IRQ*(7..1)
CS*(10..0)
DSACK0*
CAN_INT*
CAN_CS*
UART_CS*
UART_INT*
UART_CS*
UART_INT*
RD*
WR*
FPGA
MSUB CAN
D_5V(15..8)
A(7..0)
R/Wn
DSACK0*
CAN_INT*
CAN_CS*
RESET*
CLK
RX/TX
CAN DRIVER
Table Can H
Table Can L
PET DUART
UART_CS*
D_5V(15..8)
A(4..1)
UART_INT*
RD*
WR*
RESET*
CLK
RX/TX
RX/TX
PET
Spare
CRDL/ELEV DUART
A(4..1)
D_5V(15..8)
UART_CS*
UART_INT*
RD*
WR*
RESET*
CLK
RX/TX
RX/TX
Cradle
Elevation
3.68 MHz Clock
Switches
Board Reset
Service / Normal
Elevation UP / DOWN
Cradle IN / OUT
Cradle Unlatch
Characterization ON / OFF
Characterization Fast / Slow
Cradle Interference Sw
Cradle Limit Sw
Cradle Drive Input 1&2
Cradle VCC Input Signals
Tape Switch Present
Tape Switch Contact
Elevation UP Limit Sw
Elevation Down Limit Sw
Elevation Interference Sw 1&2
Elevation Drive Input 1&2
Elevation VCC Input Signals
Pet Interference Sw 1&2
Pet Limit Switch 1&2
Pet Proximity Switch
Pet VCC Input Signals
Cradle Encoder Input (18 bits)
Elevation Encoder Input (14 bits)
Pet Encoder Input (14 bits)
Encoder Gray Code Inputs
Motion Enable (+/-)
Table Drive Enable (+/-)
MSUB TABLE Sync (+/-)
Differential Input signals
Elevation 24Vdc Drivers
Elevation Enable
Elevation Brake
Elevation UP Inhibit
Elevation Down Inhibit
Elevation Fault Reset
Cradle 24Vdc Drivers
Cradle Enable
Cradle Home Latch
Cradle Clutch
Cradle Brake
Cradle Spare
Cradle IN Inhibit
Cradle OUT Inhibit
Cradle Fault Reset
Pet 24Vdc Drivers
Pet Enable(1.32s Off Delay)
Pet Fault Reset
Pet Down Inhibit
Pet UP Inhibit
Pet Brake
Pet Back
Pet Forward
Pet Spare
Differential Output signals
Table Status (+/-)
Table Cradle Sync (+/-)
Elevation Encoder CHA
Elevation Encoder CHB
Cradle Encoder CHA
Cradle Encoder CHB
Pet Encoder CHA
Pet Encoder CHB